Electric Motors for Machines and Mechanisms

Introductory Session
at M.I.T.
April 6, 2012

David Marks
Motor Engineering and Research Manager
Motor Technology Advancement Team Founder / Leader
Motor Technology Council Chairman

Moog, Inc.
East Aurora, New York
Moog Components Group
Blacksburg, Virginia

MOOG

Objectives:

- (1.) Introduce **Electric Motor Technology** and Its Role in Machines and Mechanisms
- (2.) Survey Various **Major Types of Motor Designs** with an Emphasis on Permanent Magnet Motor Solutions
- (3.) Provide a **Technical Basis for Selecting and Sizing Motors with Their Unique Attributes** for Motion Control Applications

MOOG

Survey Questions...

1) Who has used an electric motor in a lab or robotics project?
2) What is contained in many motors that is described as “rare” but as a commodity is not really rare?
3) Who has developed a finite element analysis (FEA) model of an electric motor?
4) Would you say that magnetic flux is invisible but detectable or simply imaginary for modeling and calculating?
5) What is an “Air Gap” in a motor and what does it do?
6) Is the relationship between electric fields and magnetic fields relative or more about relativity?
7) Where’s the best place to buy a motor?

MOOG

Electric Motor Technology and Its Role in Machines and Mechanisms

Electric Motor Technology

ROTOR FIELD WITH MAGNETS

ARMATURE WITH WINDINGS

Electric motors **convert electric power into a controllable mechanical rotary motion**.

Electric motors typically function in a **Motion System** with **drive electronics, software, and position feedback** to provide **controlled motion** for machines and mechanisms.

Electric Motor Technology

Electric motors can also **convert electric power into a linear force motion**.

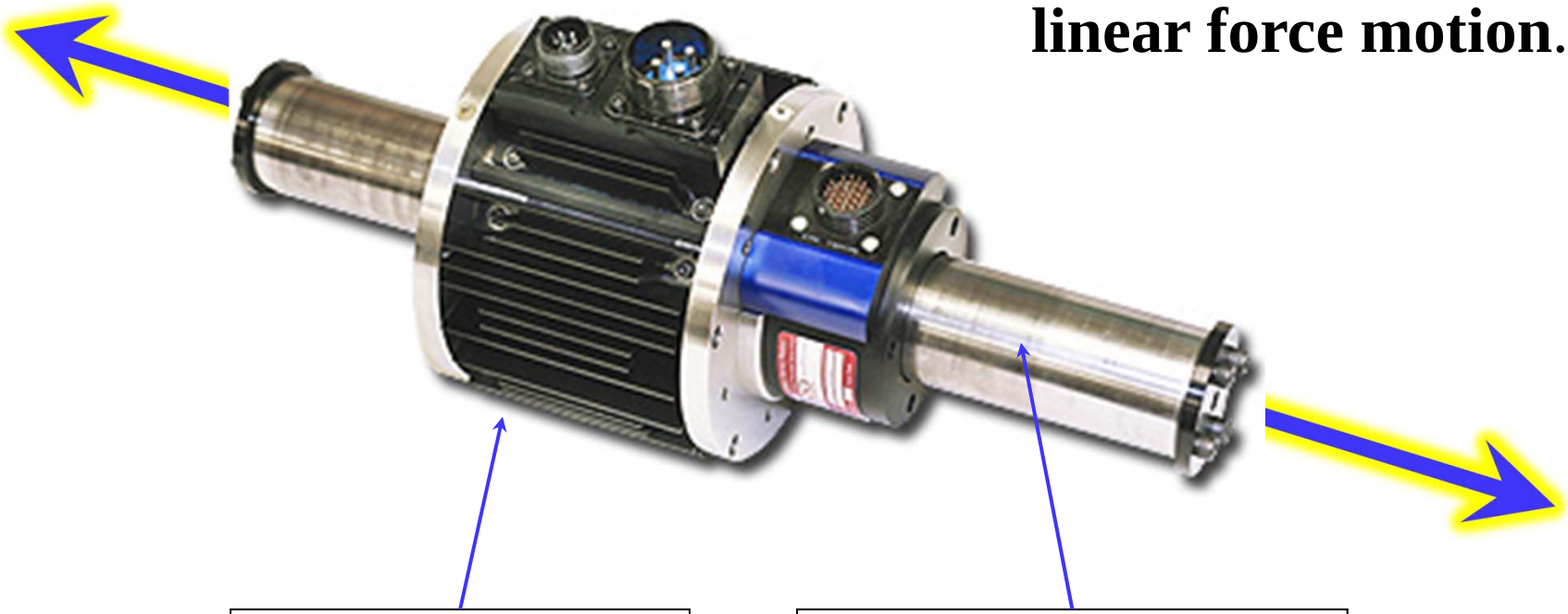

HOUSED STATIONARY ARMATURE WITH WINDINGS

SHAFT & PERMANENT MAGNET FIELD ASSEMBLY FOR AXIAL TRANSLATION

Electric Motor Technology

Elemental Geometry

A small motor **air gap** exists between the field and armature for mechanical clearance.

Magnetic fields are **modeled** with **flux lines** that travel across the air gap and through the iron to complete a **closed magnetic circuit.**

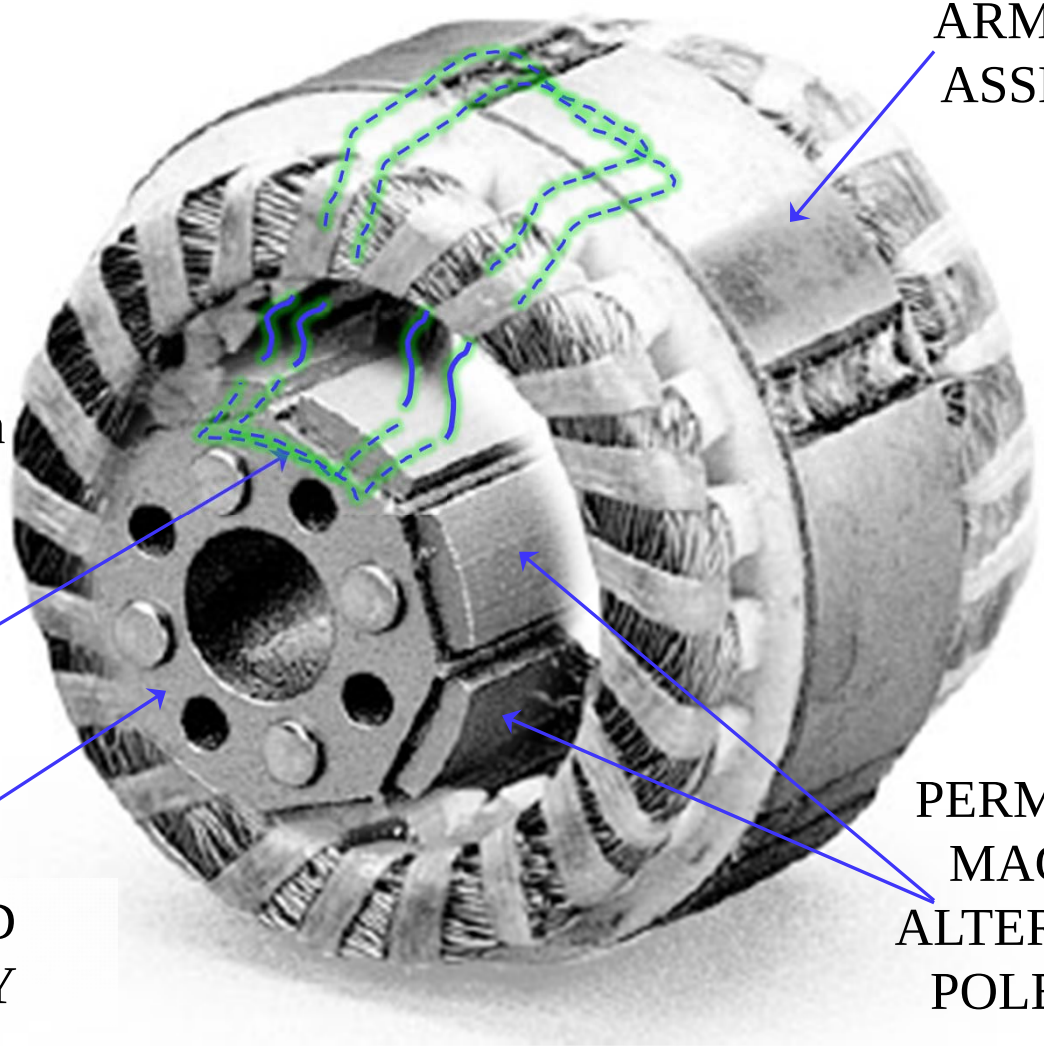

Electric Motor Technology

Elemental Materials

COPPER
WINDINGS

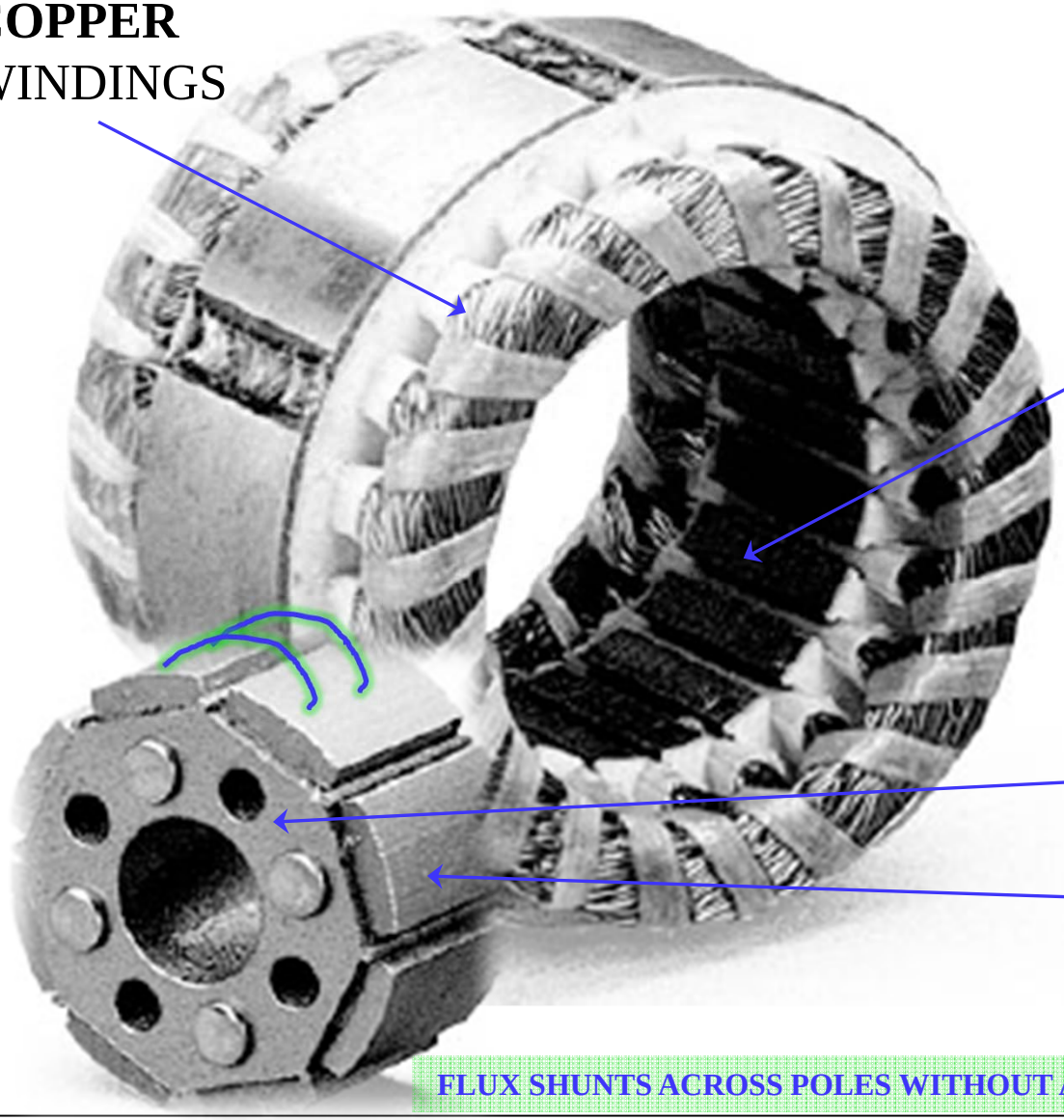

ARMATURE MATERIAL IS LAMINATED SOFT MAGNETIC IRON SUCH AS **SILICON STEEL** TO CARRY AND DIRECT MAGNETIC FLUX.

FIELD BACK IRON MAY BE **COLD ROLLED OR 416 STAINLESS STEEL.**
MAGNETS MAY BE **SAMARIUM COBALT** or **NEODYMIUM BORON IRON**.

FLUX SHUNTS ACROSS POLES WITHOUT ARMATURE IRON

Electric Motor Technology

Elemental Operation

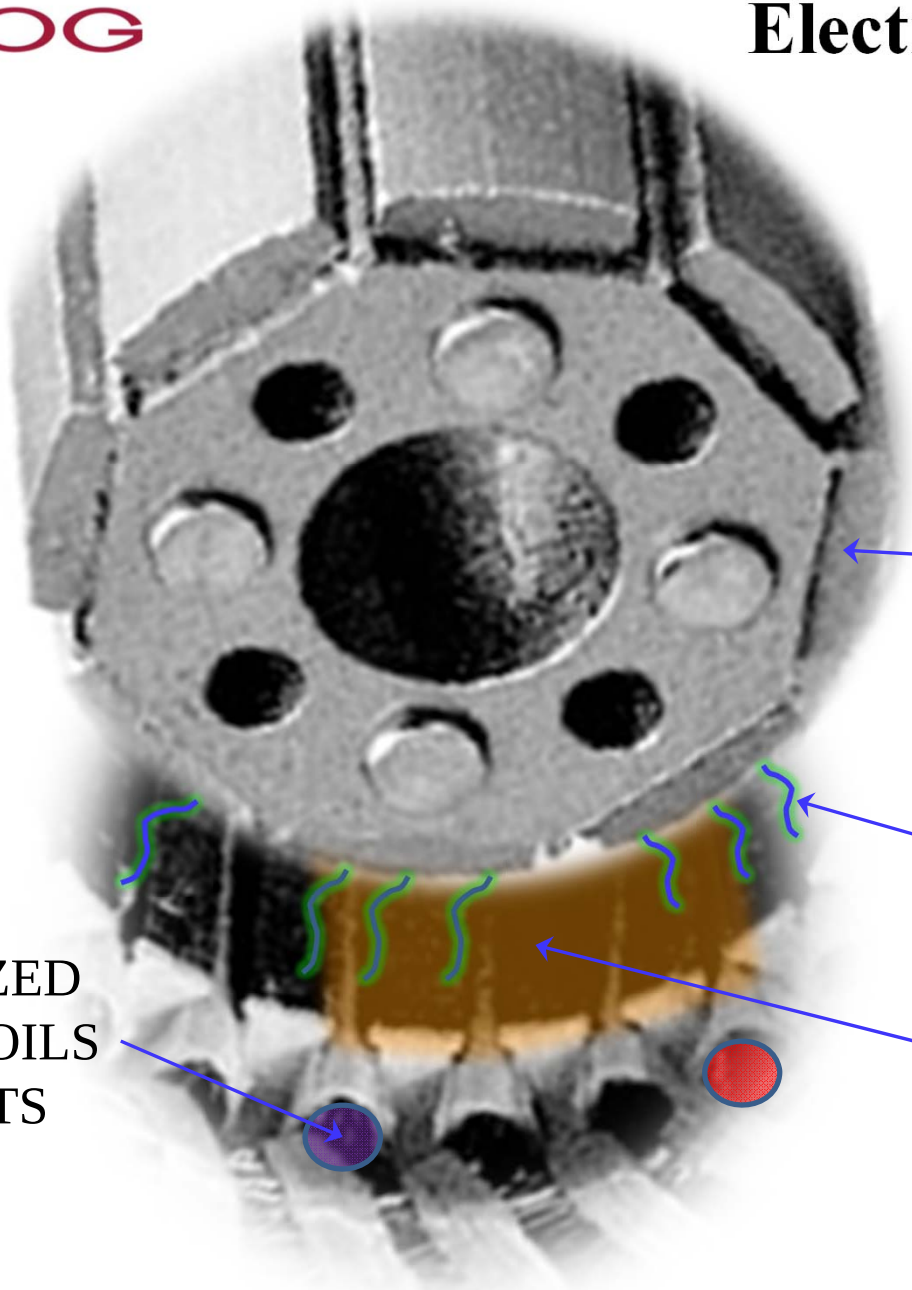

MOTOR MAGNET POLES

INTERACTION BETWEEN MOTOR **MAGNET POLE FLUX** AND ENERGIZED **PHASE COIL FIELDS** CREATES FORCE IN AIR GAP AND MOTOR TORQUE.

ENERGIZED PHASE COILS IN SLOTS

Electric Motor Technology

Elemental Analysis

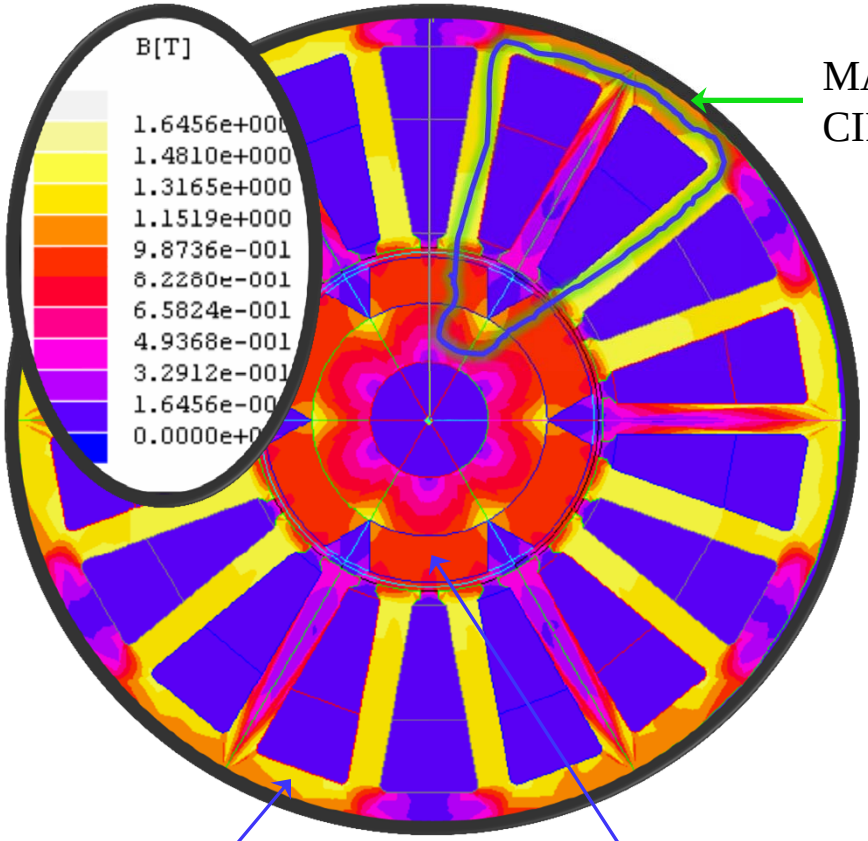

MAGNETIC FLUX CIRCUIT PATH

LAMINATION

ROTOR MAGNETS

MOTOR DESIGN TYPICALLY INVOLVES 2D OR 3D **FINITE ELEMENT ANALYSIS (FEA).**

FLUX DENSITY B(T) IN THE VARIOUS PARTS OF THE **MAGNETIC CIRCUIT** IS EVALUATED TO DETERMINE IF THE MOTOR CAN MEET PERFORMANCE AND TO AVOID "SATURATION" BEING PRESENT IN THE SOFT IRON MEMBERS.

Electric Motor Technology

Elemental Trades

Frameless Brushless Motor

Modifications to Affect Torque Output

Diameter and Stack Changes

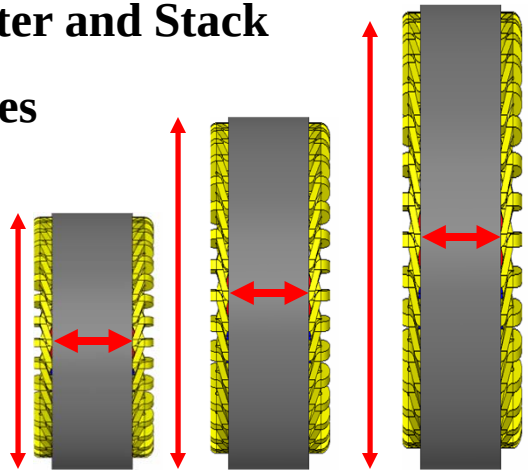

Trade Possibilities…

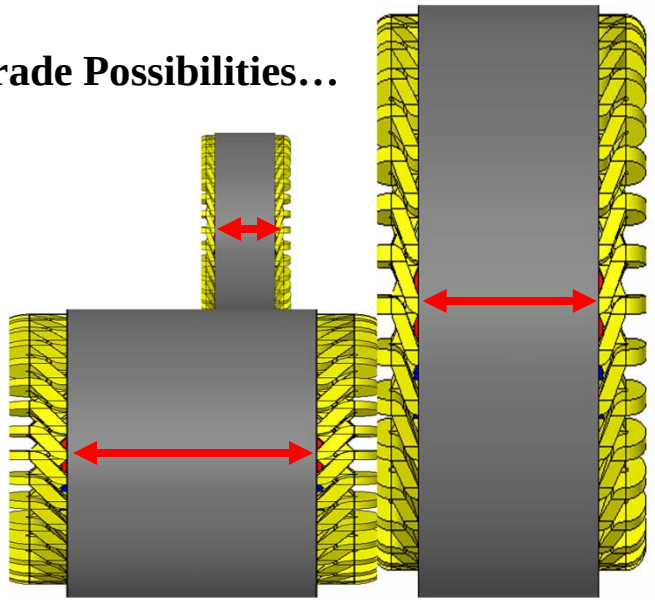

Kt and Torque increase quickly with diameter changes with rule: $T \sim D^2L$.

Larger Diameters permit a higher pole count, higher Km, and higher torques.

Stack, Diameter, and Winding changes combined offer many trade possibilities…

Electric Motor Technology
Requirements

Electric motors must be **selected** so that **space claim, power, response**, and **cost requirements** are met.

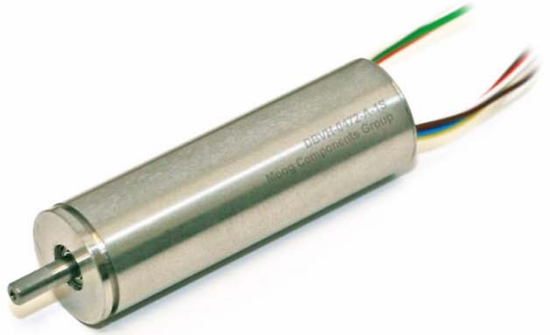

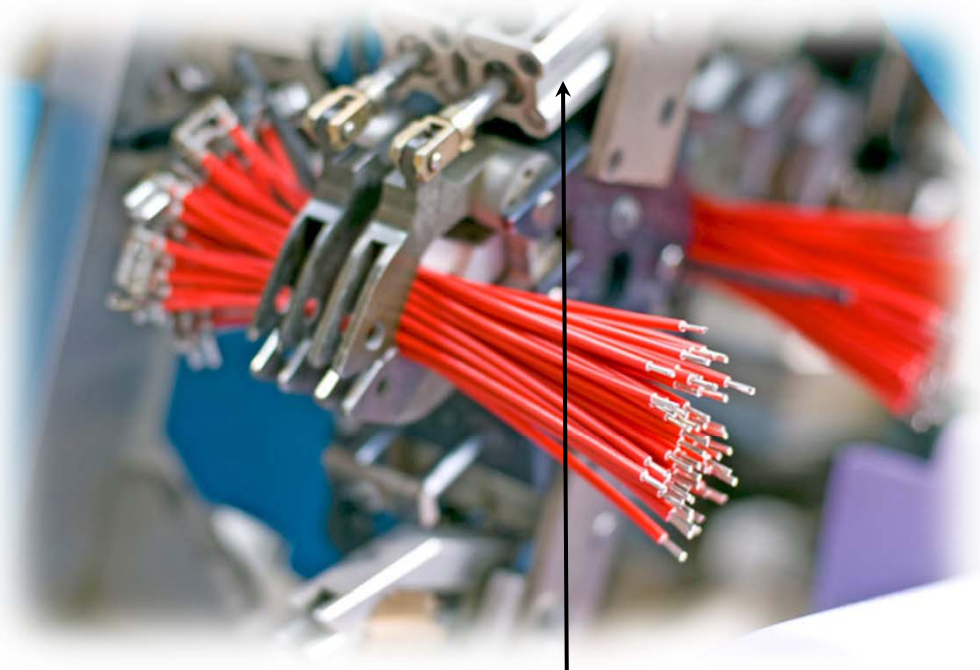

MOTOR ACTUATORS

The brushless motor shown is less than 12 mm (less than one half inch) in diameter. It is brushless, three phase, DC powered and has fast dynamic response.

Electric Motor Technology
Controllers

Motors rely on discrete or integrated **controller technology** to accomplish precise actuation. The controller and motor technology are integrated in the Smart Motor products shown.

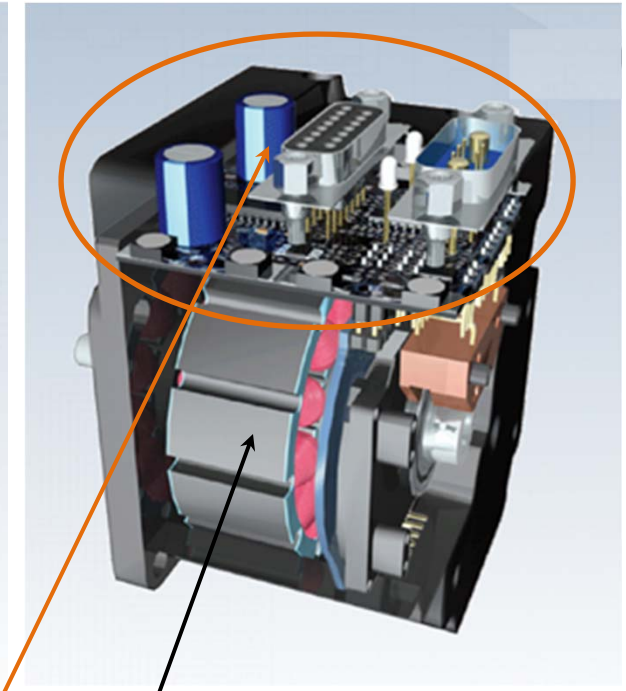

DRIVE ELECTRONICS

BRUSHLESS MOTOR

Electric Motor Technology

Machinery

Integrated motor and controls are shown used to control a plasma cutter machine.

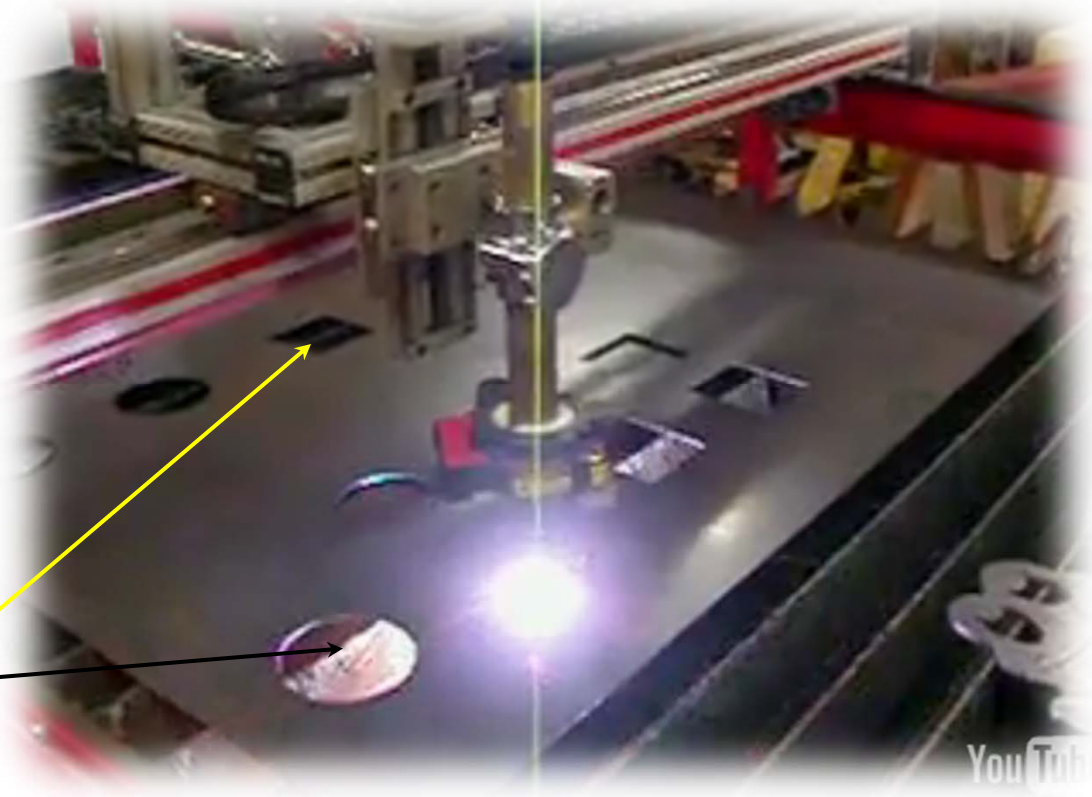

PLASMA CUTTER MOTION PROGRAMMED FOR DIFFERENT SHAPES

Electric Motor Technology

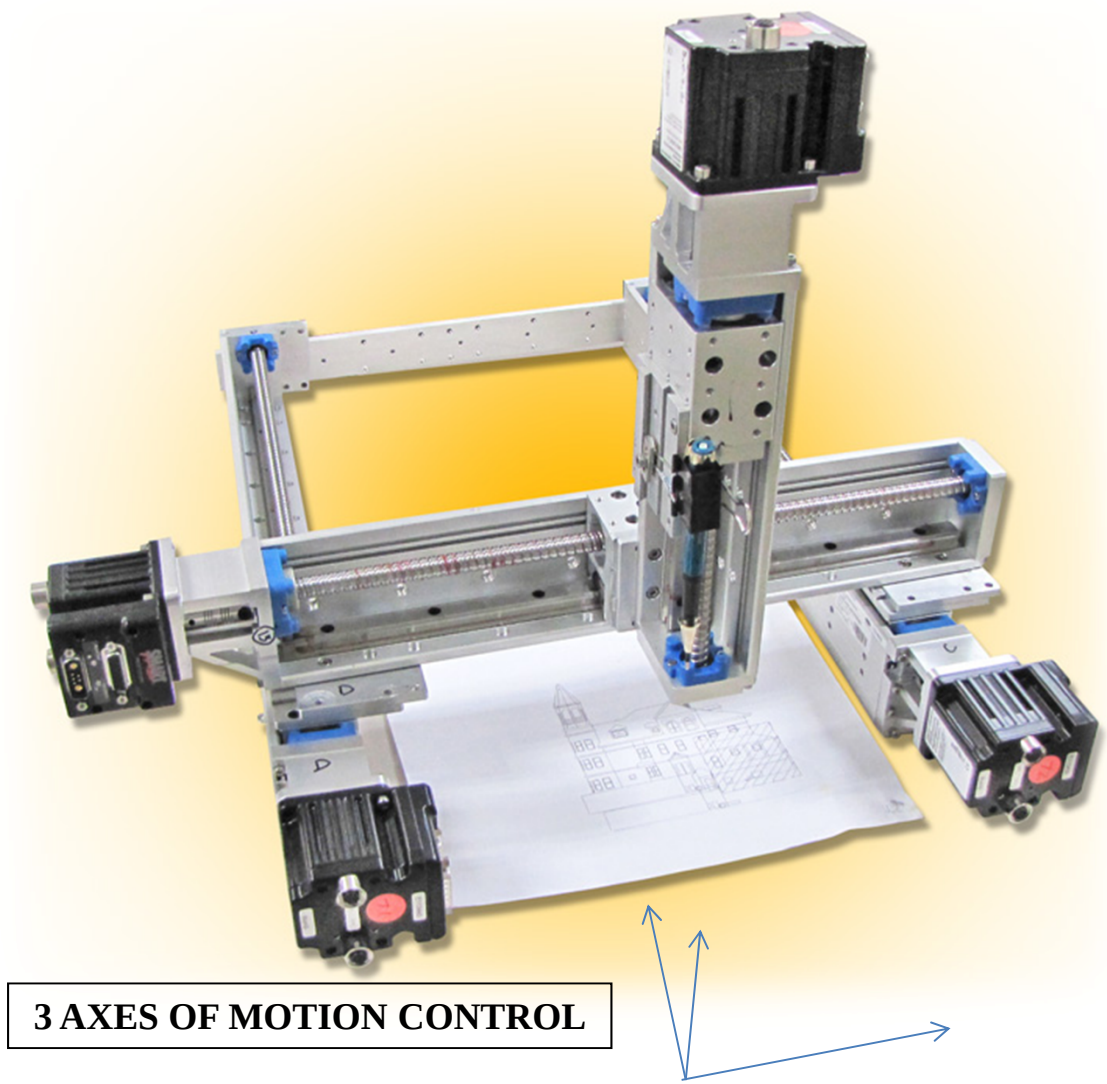

3 AXES OF MOTION CONTROL

Systems rely on feedback data and complex software algorithms to assure multi-axis control is precise.

Trapezoidal Velocity Profile for BDC Motor

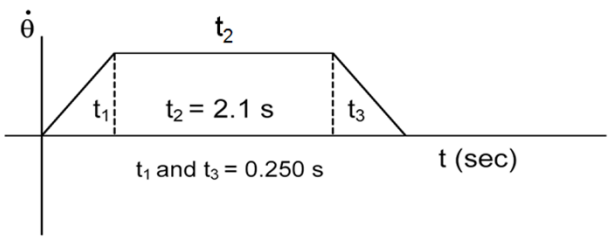

t_1 is Acceleration from Rest
t_2 is Constant Velocity Motion
t_3 is Deceleration to Rest

Electric Motor Technology

Machines may function using a central controller and multiple integrated drive-motors in concert.

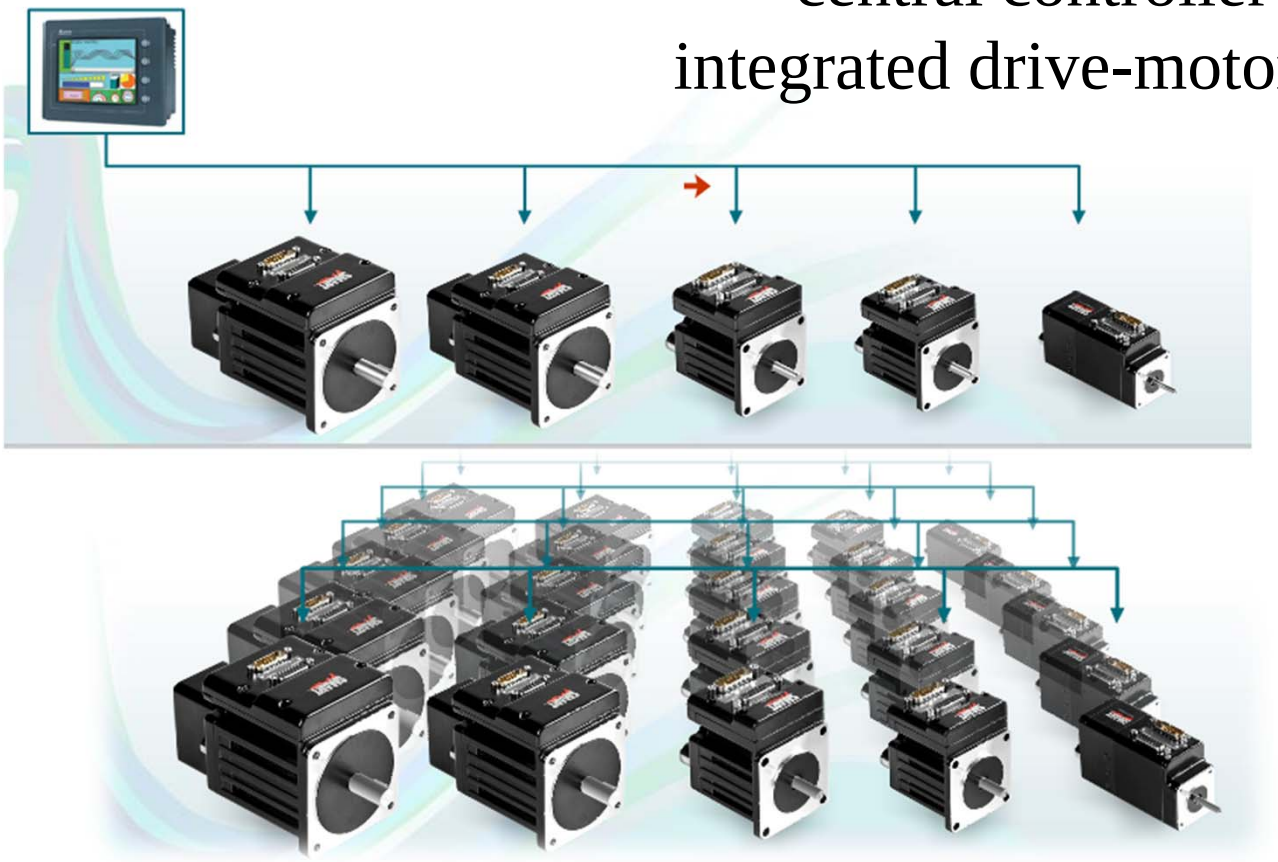

MOOG

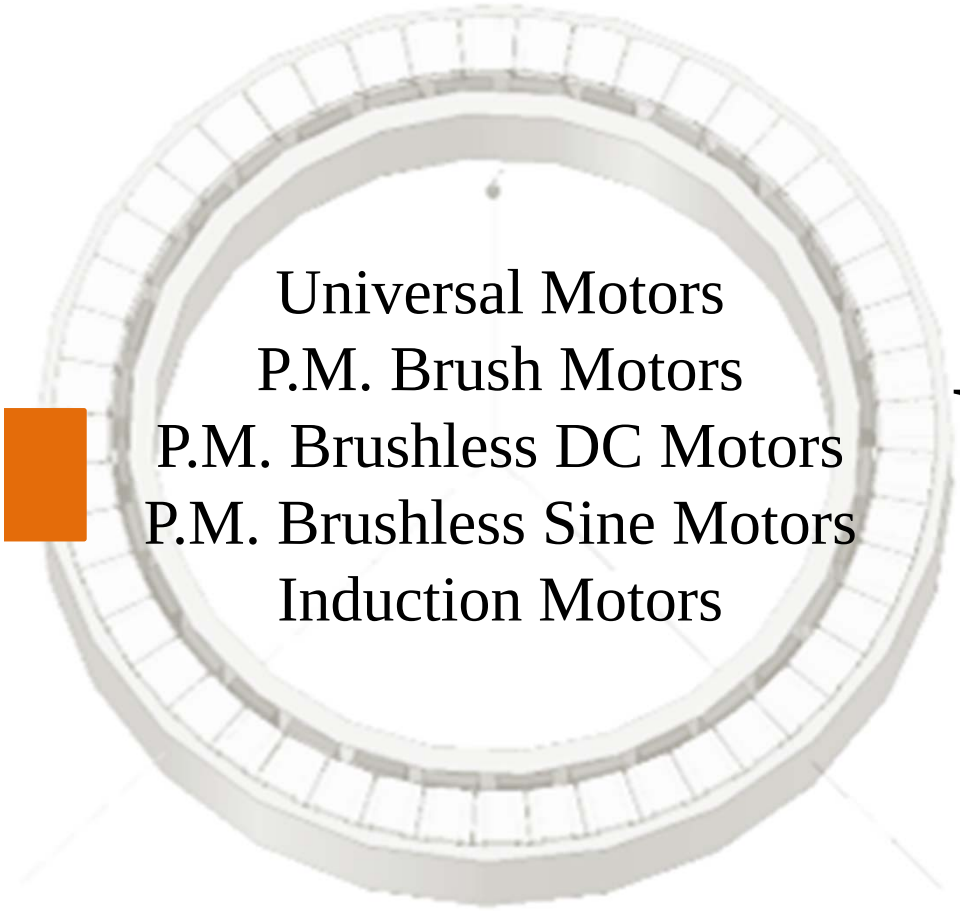

Universal Motors
P.M. Brush Motors
P.M. Brushless DC Motors
P.M. Brushless Sine Motors
Induction Motors

Major Types of Motor Designs With an Emphasis on Permanent Magnet Motor Solutions

Major Types of Motor Designs

Type	Configuration	Field Excitation	Commutation
Universal Motors	Electromagnetic Field is outer member. Armature is inner member.	Powered Coils are used for Field Excitation on outer member.	Brushes power the inner armature member through a commutator bar system.
PM Brush Motors	Magnetic Field is outer member. Armature is inner member.	Permanent Magnets are used for Field Excitation on outer member.	Brushes power the inner armature member through a commutator bar system.
PM Brushless DC Trapezoidal "6-Step" with Hall Effects	Armature is outer member. Magnetic Field is inner member.	Permanent Magnets are used for Field Excitation on inner member	Hall Effect sensors provide rotor position data to electronically commutate phase power in armature in six incremental steps per electrical cycle.
PM Brushless AC Sinusoidal with Resolver	Armature is outer member. Magnetic Field is inner member.	Permanent Magnets are used for Field Excitation on inner member	A resolver or encoder provides rotor position data to electronically commutate phase power in armature continuously through each cycle.
Induction (Not PM)	Armature is the outer member. The armature's fluctuating magnetic fields induce currents in a rotor bar system creating a rotating interaction with the armature.	The rotor excitation is induced from the powered armature.	Synchronous rotation results based on the armature input power frequency.

Major Types - UNIVERSAL

Type	Configuration	Field Excitation	Commutation
Universal Motors	Electromagnetic Field is outer member. Armature is inner member.	Powered Coils are used for Field Excitation on outer member.	Brushes power the inner armature member through a commutator bar system.

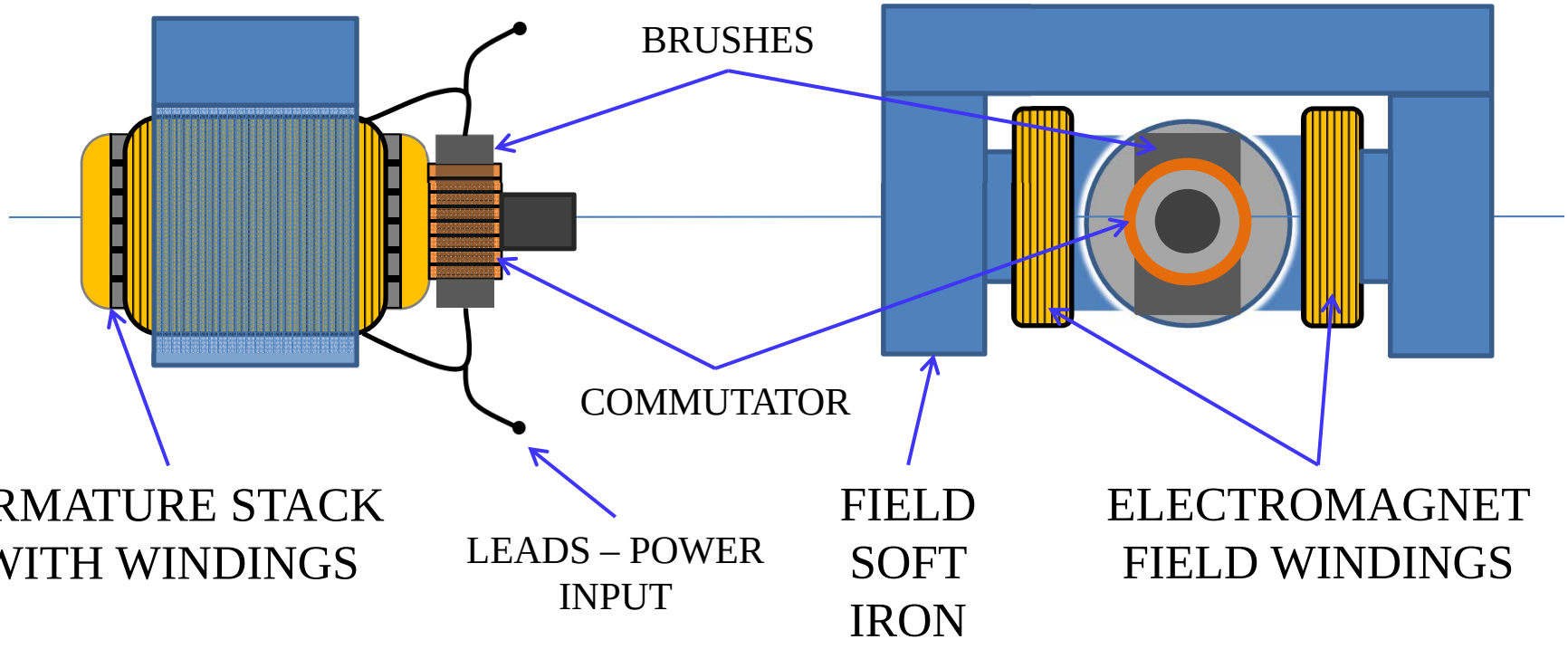

Major Types – BRUSH DC

Type	Configuration	Field Excitation	Commutation
PM Brush Motors	Magnetic Field is outer member. Armature is inner member.	Permanent Magnets are used for Field Excitation on outer member.	Brushes power the inner armature member through a commutator bar system.

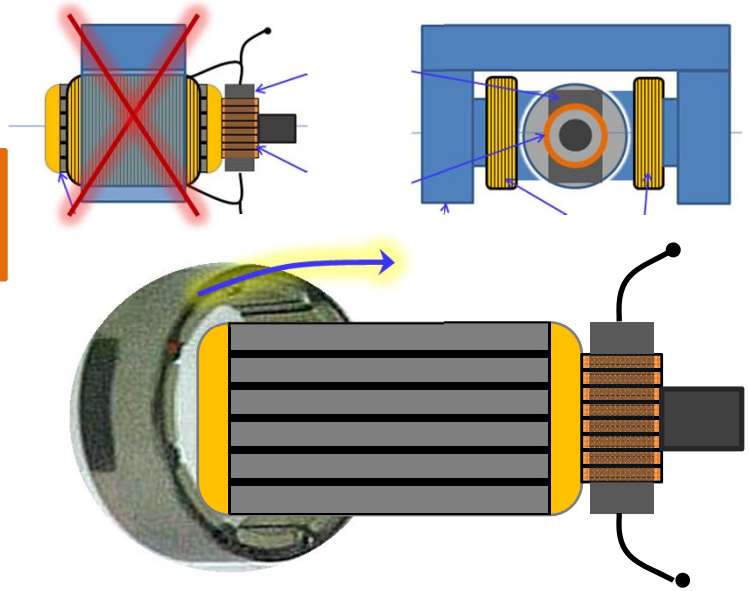

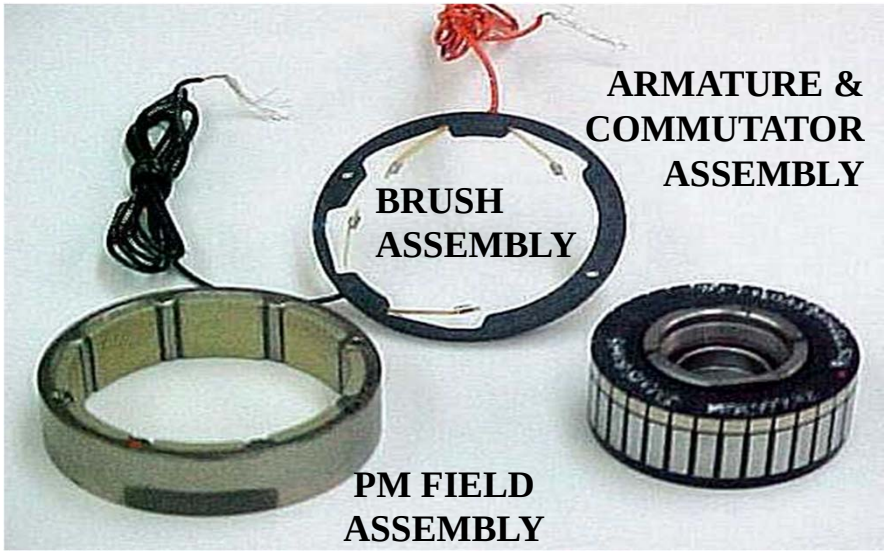

A **PERMANENT MAGNET RING** REPLACES A UNIVERSAL MOTOR'S ELECTROMAGNETIC FIELD.

Major Types – BRUSHLESS DC

Type	Configuration	Field Excitation	Commutation
PM Brushless DC Trapezoidal "6-Step" with Hall Effects	Armature is outer member. Magnetic Field is inner member.	Permanent Magnets are used for Field Excitation on inner member	Hall Effect sensors provide rotor position data to electronically commutate phase power in armature in six incremental steps per electrical cycle.

Frameless Brushless Motor – Armature becomes outer member typically

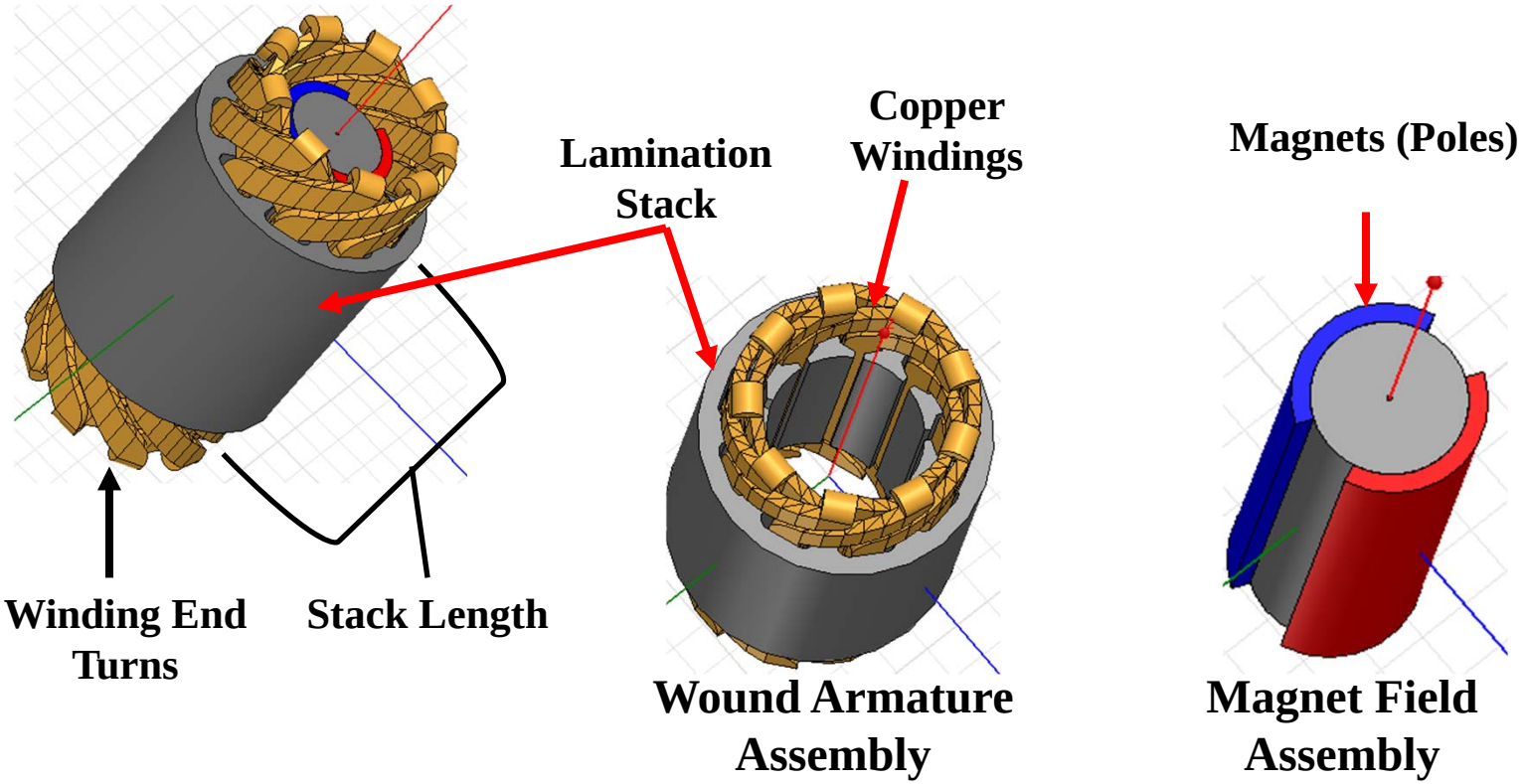

Major Types – BRUSHLESS DC

Motor Phase Schematic and Hall Effect Devices Inserted

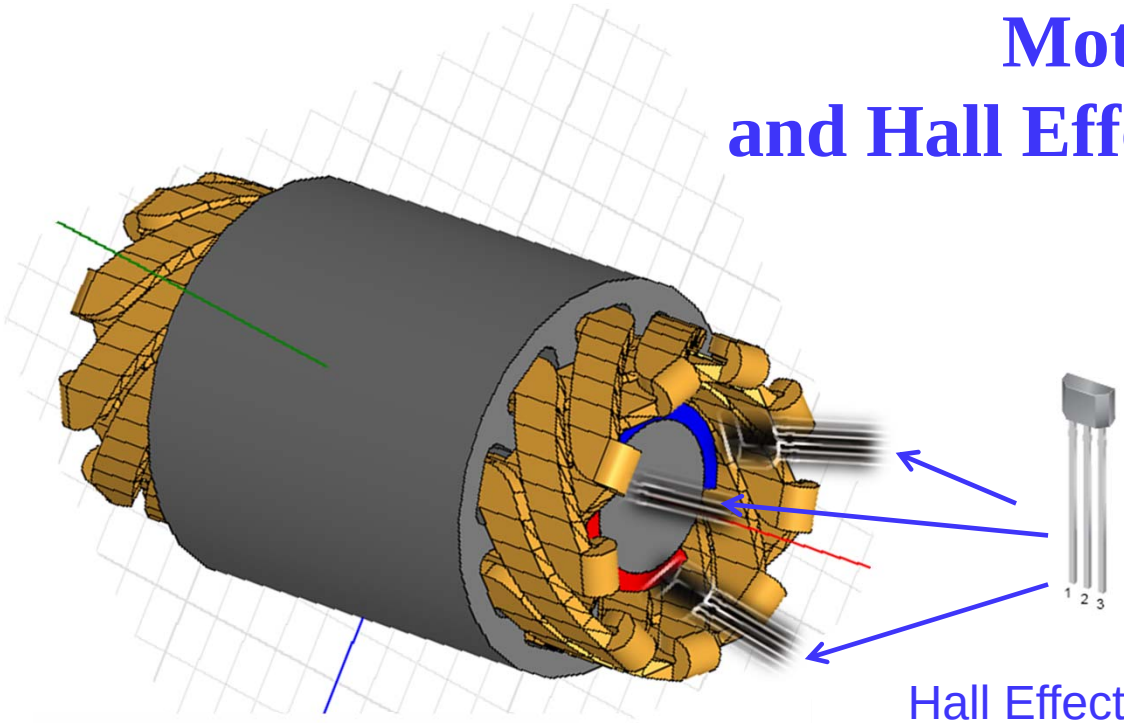

Three **Hall Effect Devices** are commonly used to provide rotor **magnet position feedback** for **phase power commutation** in the **drive electronics.**

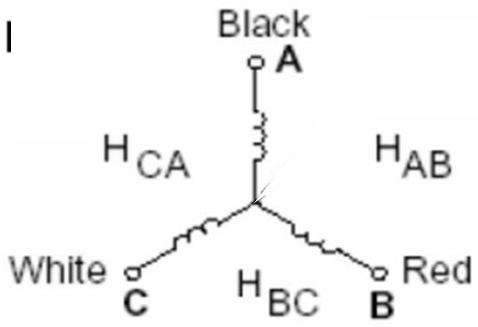

Three motor phases are wye connected.

Hall Effect and Motor Phase Alignments

DEGREES	ELEC	0	60	120	180	240	300	360	60	120	180	240	300	360
S1 OUT														
S2 OUT														
S3 OUT														
A COIL		–	0	+	+	0	–	–	0	+	+	0	–	
B COIL		+	+	0	–	–	0	+	+	0	–	–	0	
C COIL		0	–	–	0	+	+	0	–	–	0	+	+	

Major Types – BRUSHLESS DC

Motor, Drive, and Hall Effect Connections

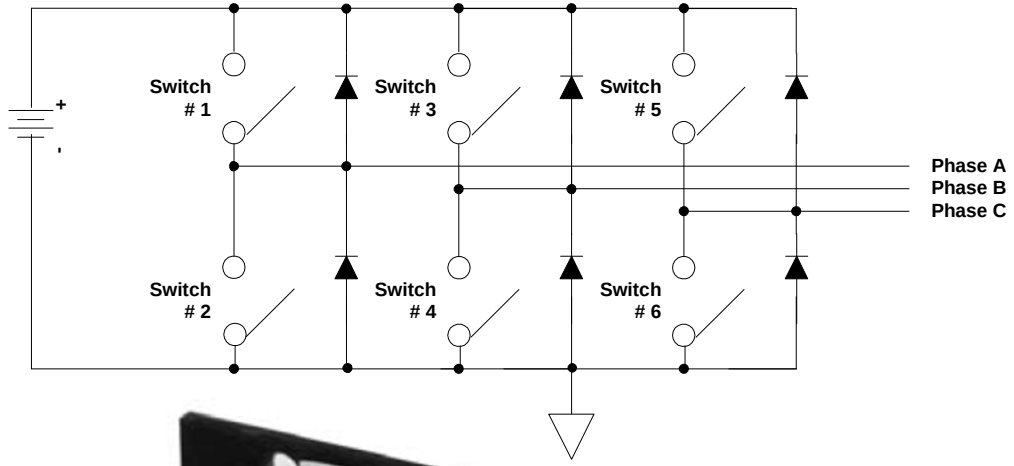

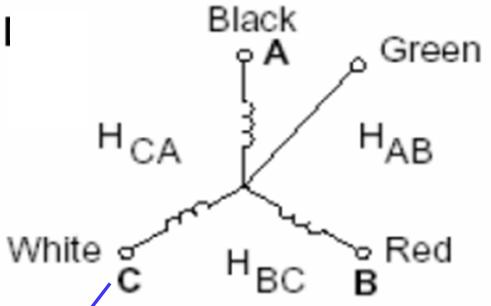

Motor Phase Schematic

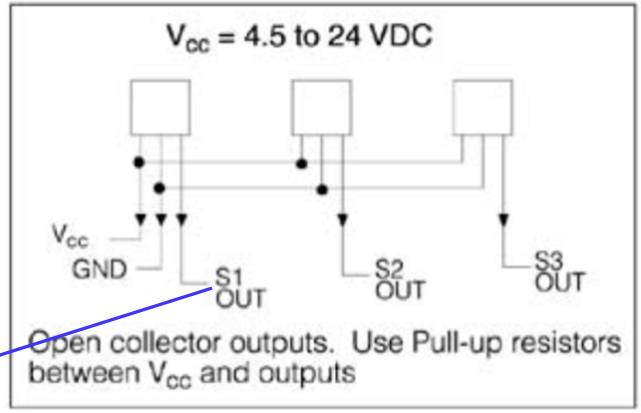

Hall Effects Schematic

Major Types – BRUSHLESS DC

Trapezoidal Six Step Brushless Excitation

(1.) Align Back EMF and Hall Effect Outputs

(2.) Commutate Drive Currents

(3.) Sum Phase Torques

Only two phase legs are excited at one time.

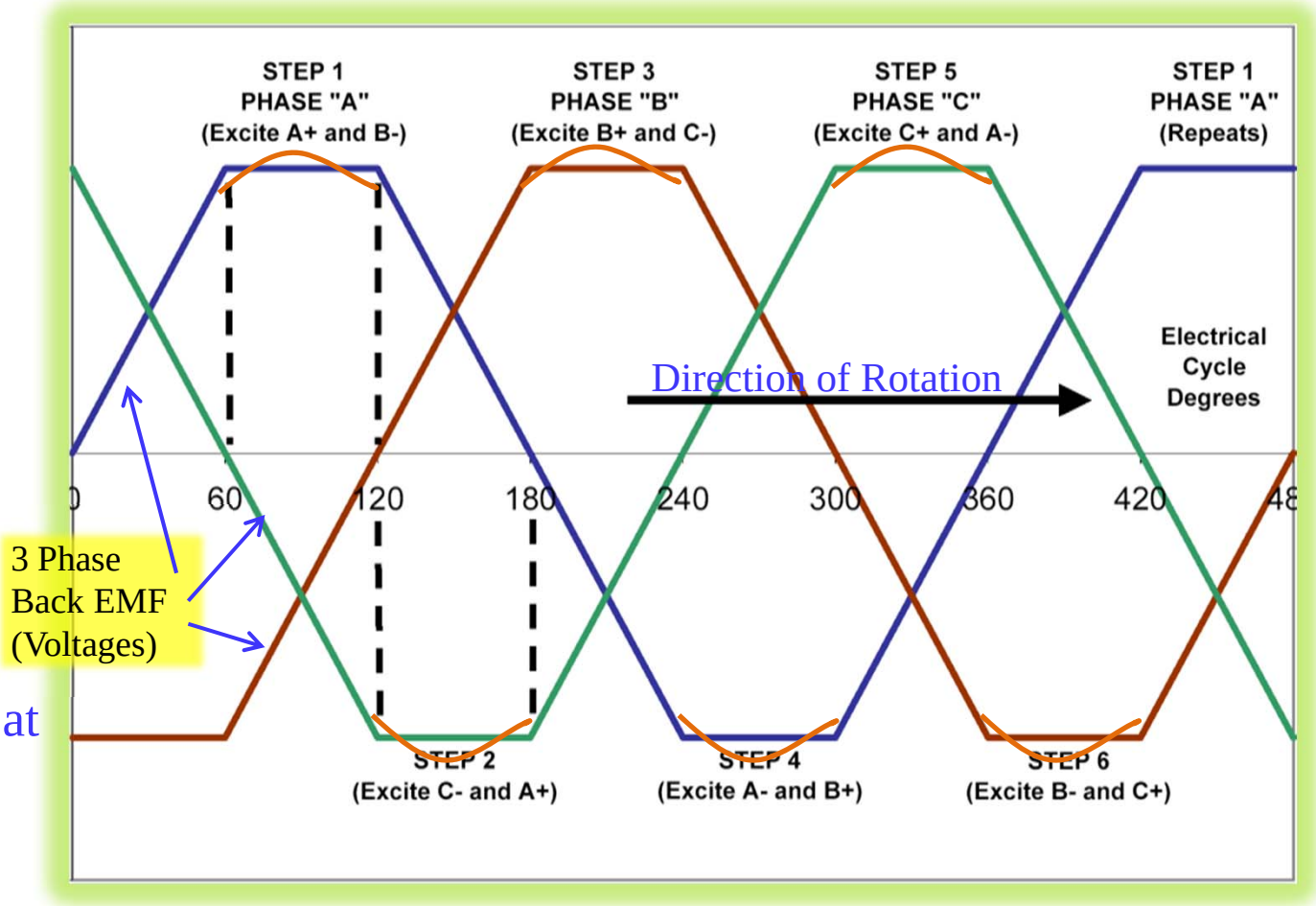

Sum Phase Torques Over Time

Variation from average torque observed is "Torque Ripple"

Major Types – BRUSHLESS SINE

Type	Configuration	Field Excitation	Commutation
PM Brushless AC Sinusoidal with Resolver	Armature is outer member. Magnetic Field is inner member.	Permanent Magnets are used for Field Excitation on inner member	A resolver or encoder provides rotor position data to electronically commutate phase power in armature continuously through each cycle.

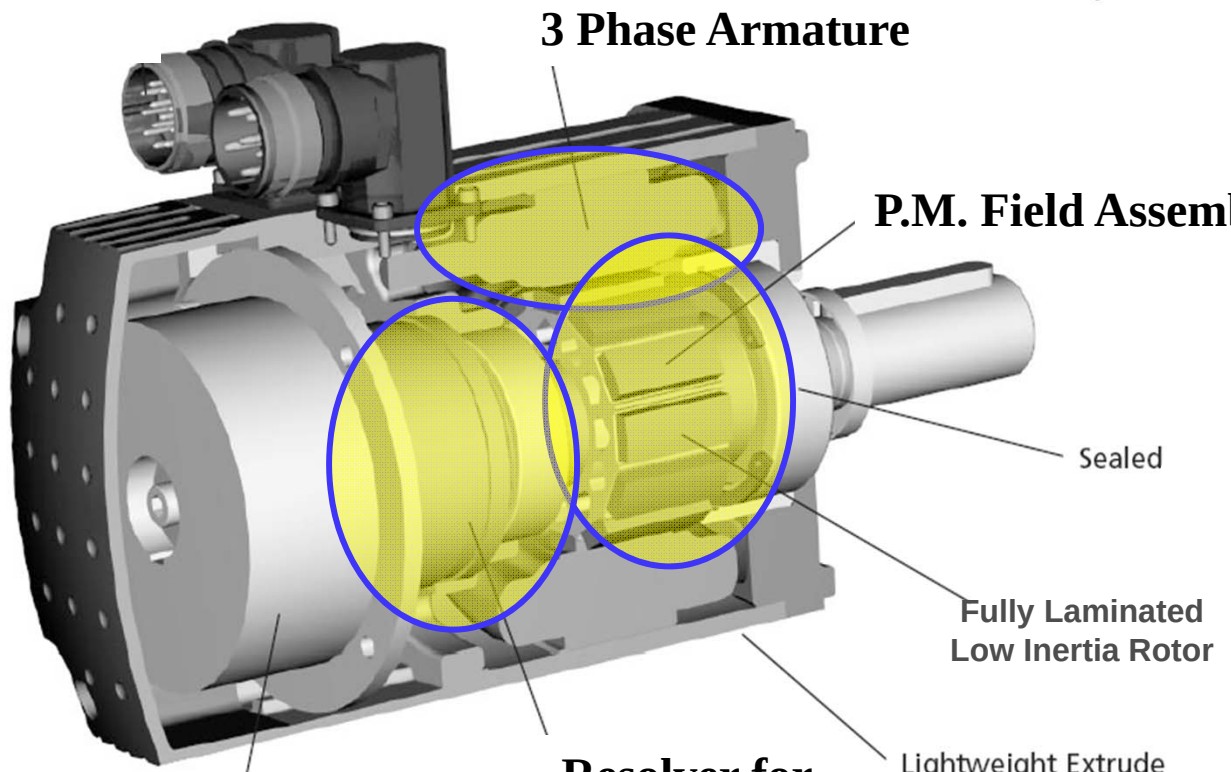

Major Types – BRUSHLESS SINE

1) Brushless Sine Motors rely on **continuous sinusoidal phase excitation** rather than an incremental six step approach.
2) A different kind of field **position sensing such as a resolver or encoder** is used to replace Hall Effects.
3) All **three phase legs are excited simultaneously** rather than just two legs in a six step drive.

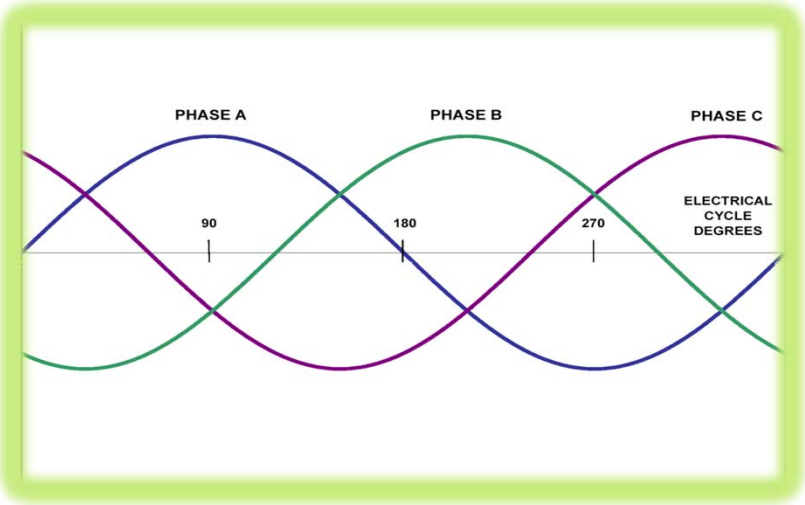

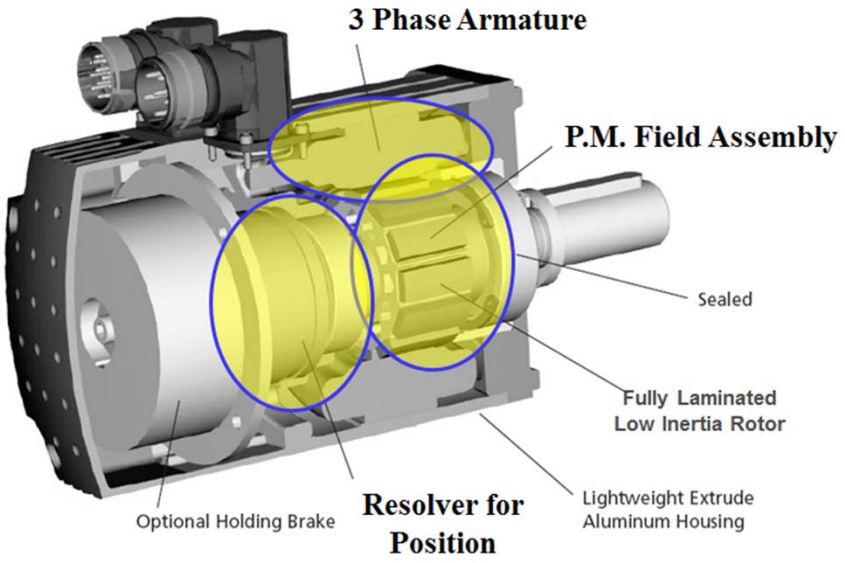

Major Types – BRUSHLESS SINE

Resolvers or Encoders Are Used for Sine Commutation

Mechanical Copper Commutators with Brushes are used for Brush Type Motors

Resolvers provide quadrature voltage **outputs converted into position information** used by the sine drive electronics to **control the sine phase currents**.

Resolvers can be **mounted integrally** with the motor insides the housing or attached externally on the rear drive shaft.

Hall Effect Devices are used to provide position feedback for Six Step Trapezoidal Brushless Motors

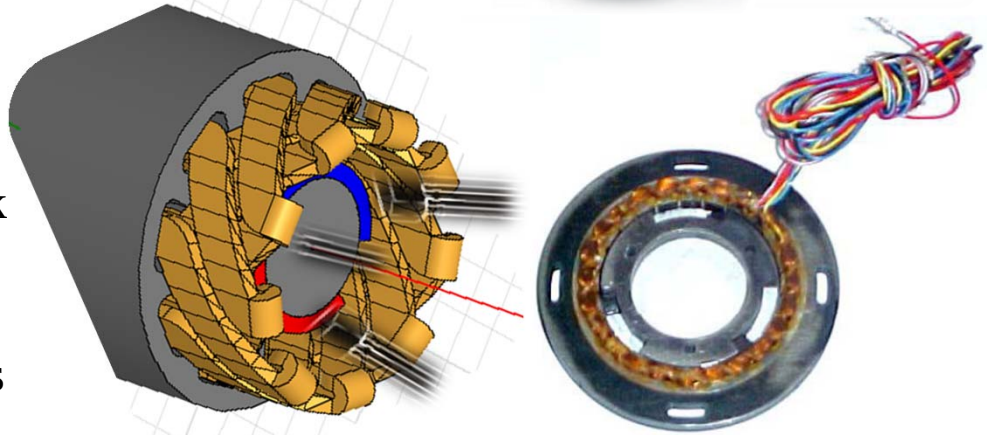

Special **Commutating Resolvers** require no inner winding.

Major Types – BRUSHLESS SINE

Trapezoidal vs. Sine Motors and Systems

Motor Feature	Trapezoidal Six Step	Sinusoidal
Back EMF Characteristic	Trapezoidal shape but may be more sinusoidal in typical motors	Purely sinusoidal to match the sine current waveforms for lower torque ripple
Magnetic Cogging	Higher	Lower
Torque Ripple	Higher ~10%	Lower ~ 5%
Feedback Devices	Hall Effects or Sensorless	Resolvers or Encoders (More Expensive)
No. Phases Excited	Two at one time	Three at one time
Power Density and System Trades	Trapezoidal may edge out Sine in terms of torque or power density but at the expense of more ripple and cogging disturbance	Provides lower disturbance, smoother rotation especially at low RPM but at expense of power density or weight
Cost	Tend to be less expensive systems	Tend to be the most expensive systems

Major Types – INDUCTION

Type	Configuration	Field Excitation	Commutation
Induction (Not PM)	Armature is the outer member. The armature's fluctuating magnetic fields induce currents in a rotor bar system creating a rotating interaction with the armature.	The rotor excitation is induced from the powered armature.	Synchronous rotation results based on the armature input power frequency.

1) The **most distinguishing feature** of an Induction Motor is it inherent ability to provide a rotating torque **without the aide of brushes, slip rings, or other devices** carrying current into the inner rotating member

2) The induction motor relies upon **transformer action** between the primary outer armature member and the inner secondary rotating member

3) The **inner secondary transformer member** under the influence of the primary armature power experiences induced currents in its limited winding scheme

4) The simplest induction motor rotor has a system of closed circuit bars typically called **a "squirrel cage"** that facilitates the flow of induced currents inside the rotor

5) The poly-phase induction motor is designed to operate when its stator is powered by **alternating currents (AC)**

Major Types – INDUCTION

Armature Assembly with multi or poly phase windings.

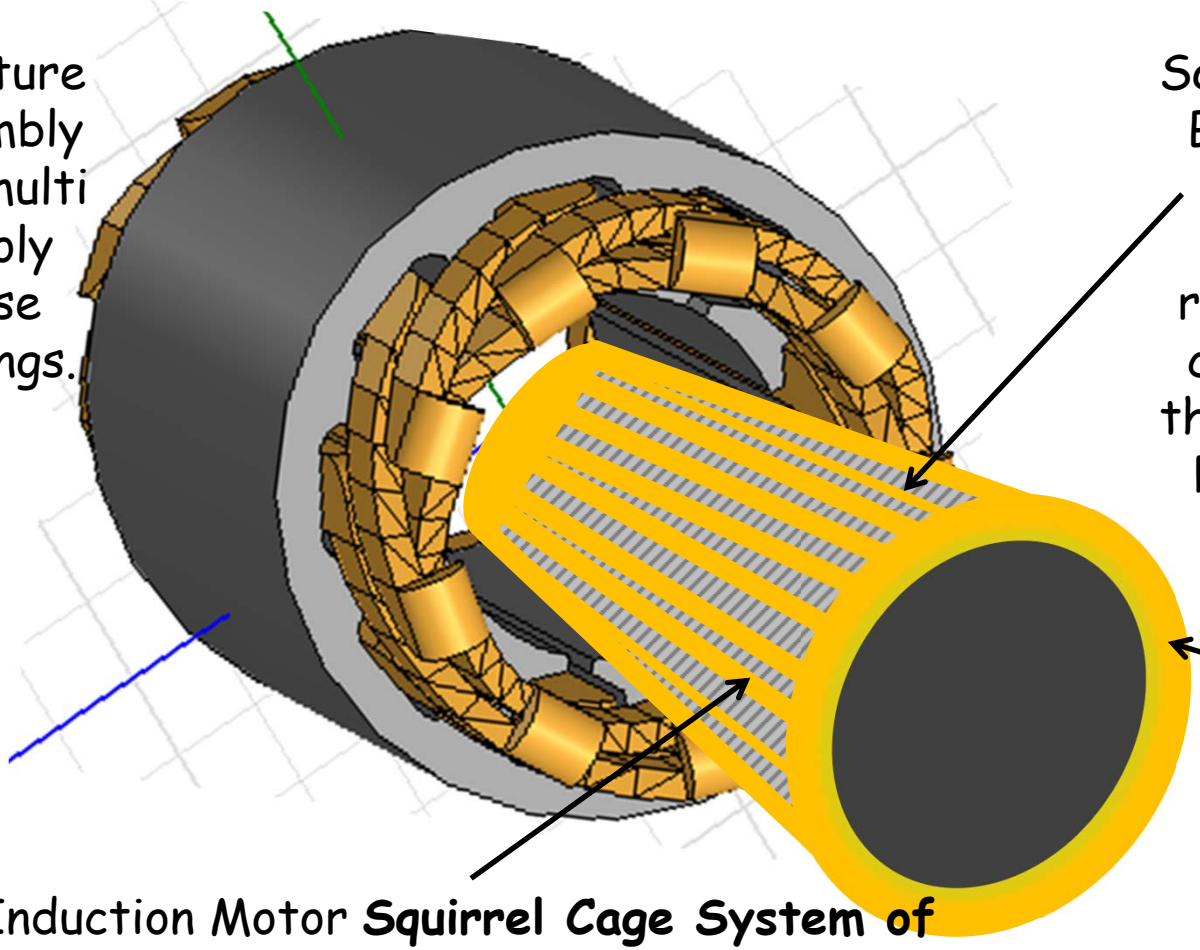

Induction Motor **Squirrel Cage System of Bars** acts as a transformer secondary winding in response to the armature primary windings. (Gold color represents copper bars.)

Induction Motor Squirrel Cage System of Bars is placed inside a **soft iron lamination** structure. Thus, the rotor is laminated with copper bars running in the slots. (Gray material between bars are the laminations.)

Copper End Rings on both ends of the rotor join the copper bars to create a closed electrical circuit. (Sometimes Aluminum is used for the cage and ends.)

MOOG

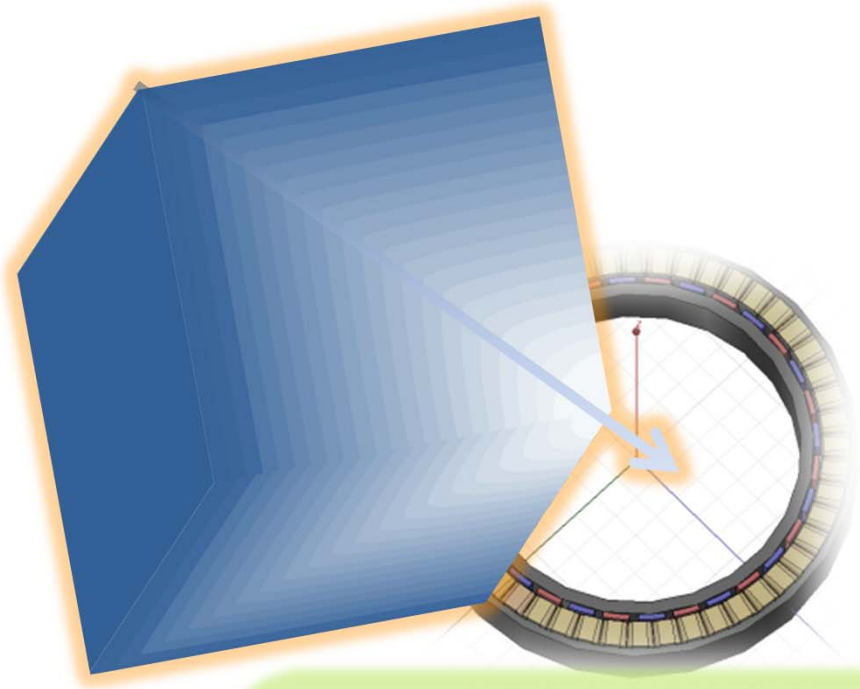

Selecting and Sizing Motors with Their Unique Attributes for Motion Control Applications

Trade Scenarios…

- Performance Density
- Technology Utilization
- Cost Targets
- Environmental Factors
- Green Technologies

Motor Selection and Sizing

Technology Advancement

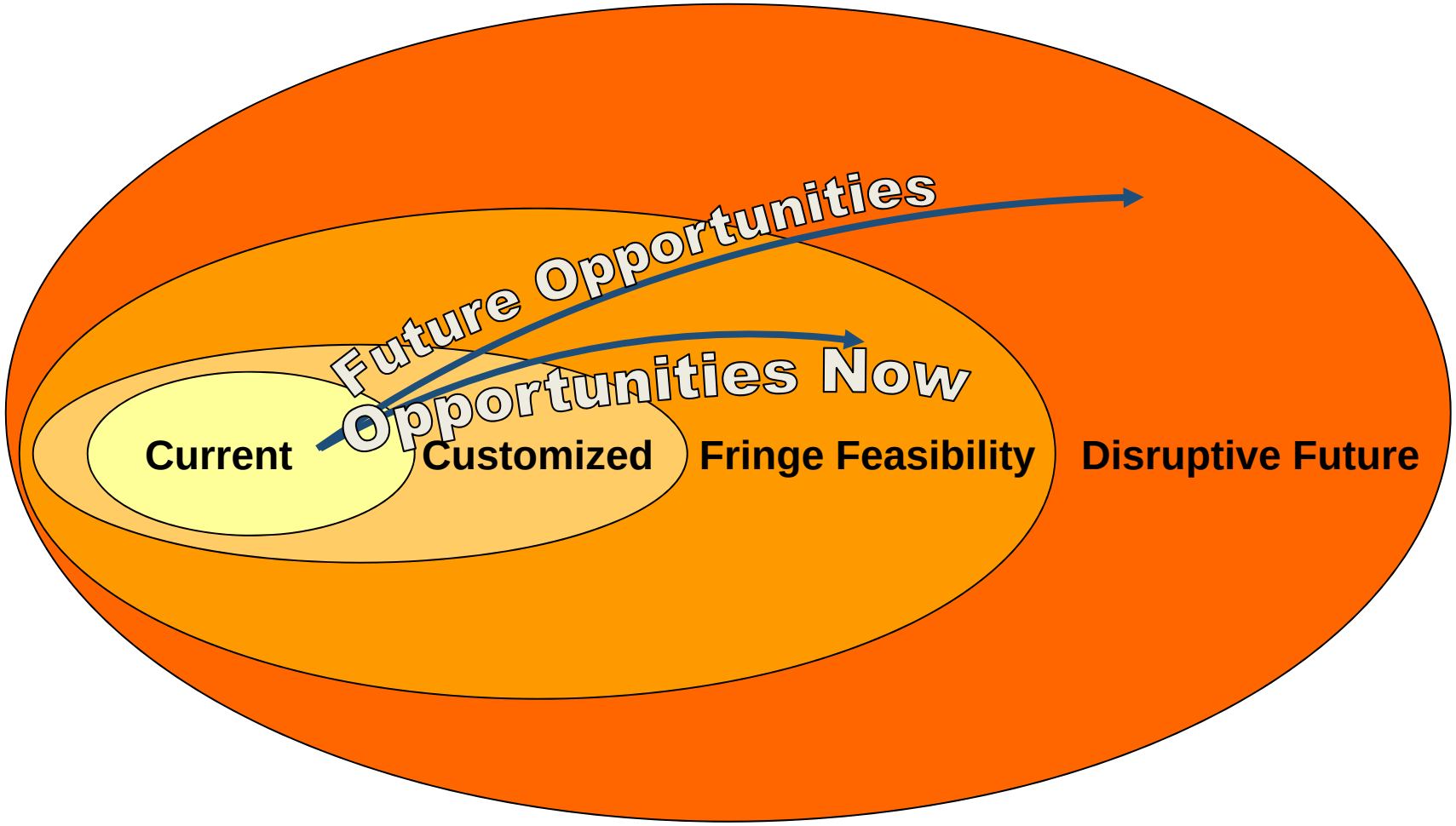

Utilize the technology that is at the level your application and cost target need.

Motor Selection and Sizing
Market Demands

Significant Motion Control Market Demands:

- Smaller Space Claims, Miniaturization of Components
- Lower Costs including the Drive Electronics
- Smoother Rotation Machines
- Higher Temperature Capability
- Higher Torque Density and Power Density
- Faster and Slower Speeds
- More Integrated Technologies (Electronics, Gears, Cooling)

Motor Selection and Sizing

Identifying Key Requirements

KEY REQUIREMENTS

Motor Type?	
Max Speed?	
Max Torque at Max Speed?	
Typical Speed & Torque?	
Stall Torque?	
Available Volts?	
Available Amps?	
Housed or Frameless?	
Outer Diameter?	
Inner Diameter?	
Overall Length?	
Winding Resistance?	
Torque Kt or Kb?	
Max. Power Input?	
No. of Motor Phases?	

SYSTEM OBJECTIVES

Drive Electronics Style	
Sine?	
Feedback?	
Six-step?	
Hall Effects?	

Priority Objectives	
Power?	
Weight?	
Ripple?	
Torque?	
Cost?	

Direct Drive vs. Gearing

Motor Selection and Sizing

Basic Brush or Brushless Motor Definitions

K_b = Back EMF Constant = V/rad/sec

K_b is the back EMF constant, may also be listed as K_e

Back EMF is the voltage produced when driven as a generator or the opposing voltage produced when operated as a motor

$K_t = K_b$ (N.m/a)

$K_t = K_b / 0.00706$ (oz.in/A)

K_t is the torque sensitivity (torque to current ratio)

Motor Selection and Sizing

Basic Brush or Brushless Motor Definitions

Input Current at any Operating Point

$$I = (T_L + T_F + \omega f_i) / K_t$$

Where

T_L = Load Torque

T_F = Friction Torque

F_i = viscous damping coefficient

ω = motor speed

K_t = the Torque Sensitivity

Motor Selection and Sizing

Basic Brush or Brushless Motor Definitions

Stall Torque (No Motor Rotation)

$$T_{stall} = (K_t * I) - T_F$$

K_t = torque sensitivity

I = the input current (V/R)

T_F = drag or friction torque

Motor Selection and Sizing

Basic Brush or Brushless Motor Definitions

Voltage Equation:

$$V = I * R + \omega * Kb + L\, di/dt$$

Where

V = Required Voltage
I = Current at Torque Point
L = Inductance
ω = Speed, rad/s
Kb = Back EMF constant, V/rad/s

This equation must be modified for high speed operation and certain other special conditions.

Motor Selection and Sizing

Basic Brush or Brushless Motor Definitions

Speed ω at any Operating Point:

$$\omega = (V_a - V_b - I*R) / K_b \quad \text{rad/sec}$$

Where

V_a is the applied voltage

V_b is the brush drop (if applicable)

I is the input current including running losses

R is the winding resistance temperature corrected

K_b is the back EMF constant

Motor Selection and Sizing

Basic Brush or Brushless Motor Definitions

K_m is a figure of merit, constant for a given motor design regardless of size, power, etc.

K_m is useful when selecting a motor size or changing a winding

$K_m = \text{torque} / (\text{power})^{1/2} = K_t / (R_m)^{1/2}$

Catalogs typically list K_m for each motor type.

K_m is a better figure of merit for torque applications than for integral horsepower or high speed applications.

Motor Selection and Sizing

Basic Tradeoffs

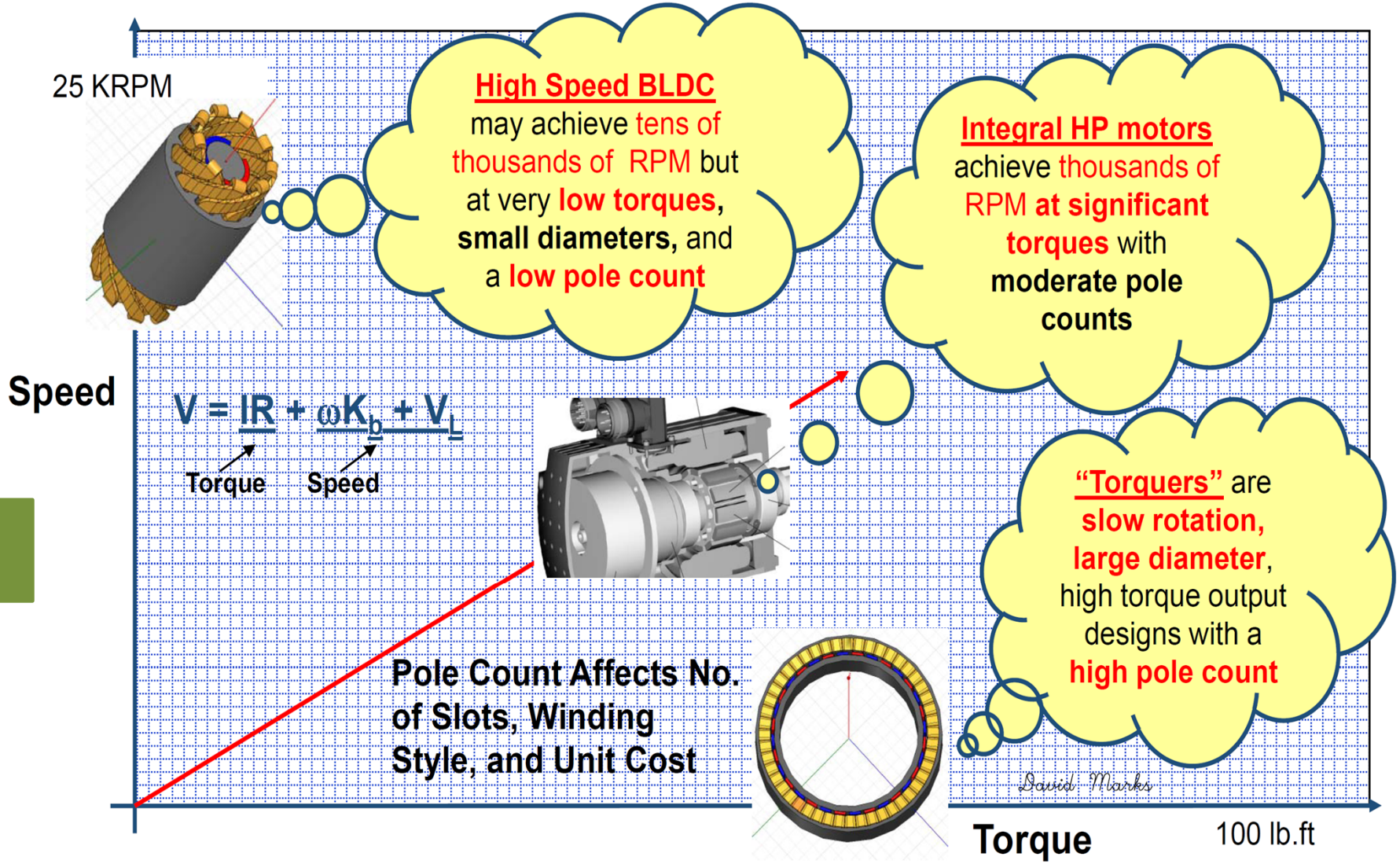

Motor Selection and Sizing

Basic Tradeoffs

Motor Category	Application Notes	Design Focus	Thermal Operation
High Speed Brushless	may achieve 100,000 RPM but at very low torques, small diameters, and a low pole count	focus on lamination iron losses, very high efficiency, and are concerned with inductive voltages	usually have such high efficiency that thermal rise is minor; lam material selection is critical.
Fractional & Integral HP	achieve thousands of RPM at significant torques with moderate pole counts	must balance iron and copper losses, retain high efficiency, and are concerned with current and voltage	usually have continuous and peak operating ranges based on the amount of heating and conduction
Torquers 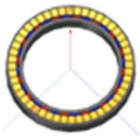	are slow rotation, large diameter, high torque output designs with a high pole count	focus on low copper I2R losses, high Km, low torque ripple, hysteresis drag, cogging, and current required.	have peak and continuous torque ratings based on thermal rise concerns.

ROBOTIC BASE MOTOR EXAMPLE

Motor Design – Basic Analysis

T = (Tload + Tdrag + Tcog) = I * Kt, or I = T / Kt

The motor must produce enough torque to cover all parasitic losses and meet the load requirement. In most cases, permanent magnet motor torque is directly proportional to current as defined by the Kt (torque per amp) constant, except at extremely high currents.

Kt = Kb in metric units of Nm/A and volts/radian/s

A motor design can be partially characterized by looking at its phase voltage output as an unloaded generator because of the equivalency of Kt and Kb.

$$V = \underbrace{IR}_{\text{Torque}} + \underbrace{\omega K_b}_{\text{Speed}} + V_L$$

Voltage is required to produce torque and develop motor speed, and should always be considered at hot, worst case conditions.

Motor Selection and Sizing

ROBOTIC BASE MOTOR EXAMPLE

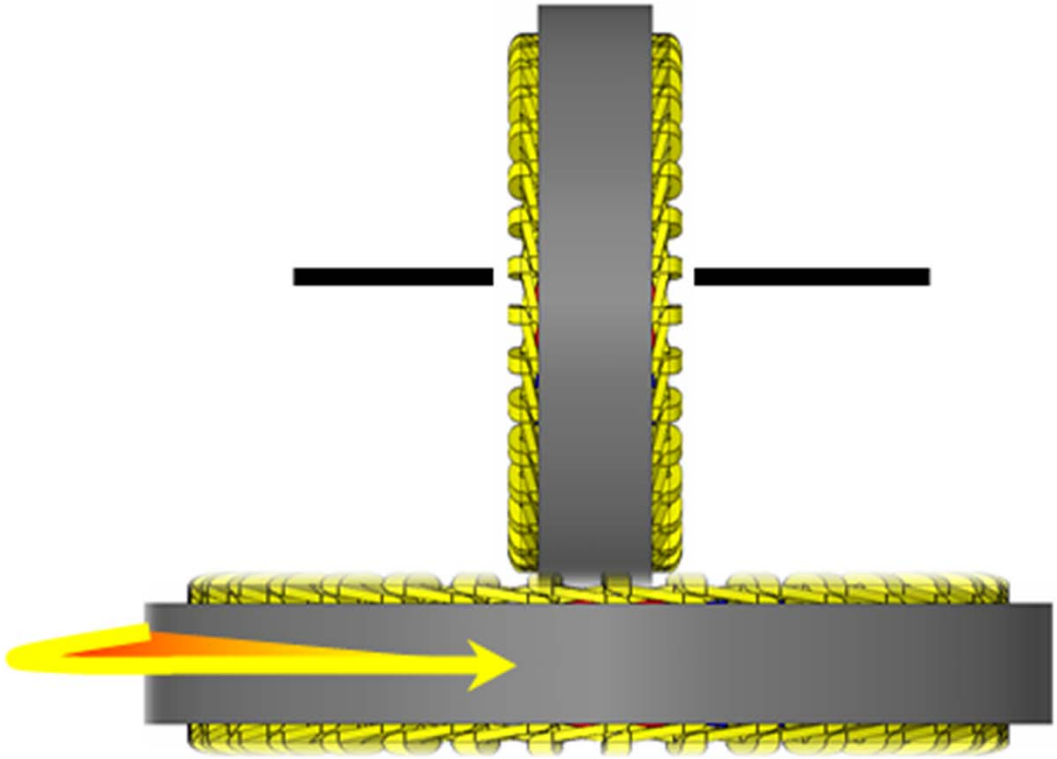

ROBOT with fully rotational base axis requires brushless torque motor drive

Motor Selection and Sizing

ROBOTIC BASE MOTOR EXAMPLE

A basic requirements are as follows for a ROBOTIC BASE:

- Start-up torque of 30 lb.ft (momentary peak) to move external load
- Normal operation at 7 lb.ft and 100 rpm for less than a minute; does not move again for another hour.
- Pancake torquer style brushless motor is desired; we will mount and it needs to be within 10 inches OD or less by 2.0 inch overall width or less
- Bearing and seal loading is about 0.3 lb.ft
- Project leader wants to use his existing 3-phase electronics driver that accepts hall effects, operates over 48 - 54 Vdc, and provides 12 A peak.

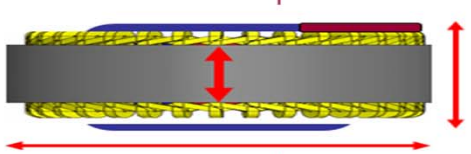

Motor Selection and Sizing

ROBOTIC BASE MOTOR EXAMPLE

EVALUATION – Solution Process…

Step 1. Interpret the space - speed – torque – duration requirements

Step 2. Find the closest existing design in catalog or on-line

Step 3. Estimate current and voltage using closest existing design

Step 4. Consider worst case conditions, such as for temperature and voltage

Step 5. Determine if design changes are needed.

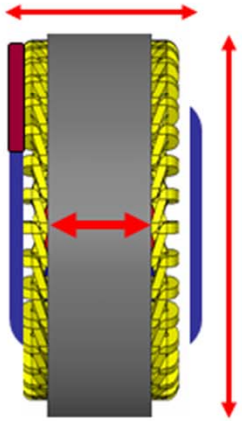

Motor Selection and Sizing

ROBOTIC BASE MOTOR EXAMPLE

EVALUATION – Solution…

Step 1. Interpret the space - speed – torque – duration requirements

Peak Torque = 30 lb.ft start-up or breakaway, no speed involved.

Operating Point is brief < one minute: 7 lb.ft at 100 rpm.

Pancake, Hall Effects, < 10" OD x < 2" Overall length

48 Volts minimum, 12 Amps maximum. There is a bearing and seal load.

Stall Torque Budget	(lb.ft)
Tstall	30.0
Tdrag	0.3
Tcog	0.6
Total Treq'd	30.9

Op. Torque Budget	(lb.ft)
Top	7.0
Tdrag	0.3
Tcog	0.3
Total Treq'd	7.6

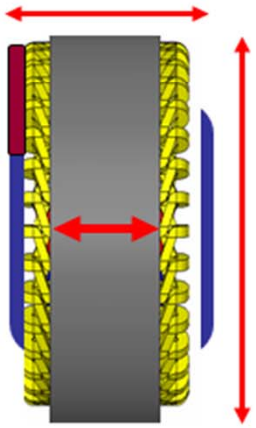

Motor Selection and Sizing

ROBOTIC BASE MOTOR EXAMPLE

Step 2. Find the closest existing design in catalog or on-line

DB-8000 SPECIFICATIONS @ 25°C

Part Number		DB-8000-A-1ES	DB-8000-B-1ES	DB-8000-C-1ES	DB-8000-D-1ES	DB-8000-E-1ES	Tolerances
Peak Torque: T_p	lb-ft	17.2	34.4	53.3	68.8	86.0	Rated
Motor Constant: K_M	lb-ft/(watt)$^{0.5}$	0.77	1.30	1.74	2.06	2.37	-
V_p @ T_p @ 25°C:	VDC	40.6	57.0	75.2	91.1	107.3	Nominal
Current @ T_p: I_p:	ADC	14.5	14.6	14.7	14.7	14.7	Rated
Torque Sensitivity: K_T	lb-ft/amp (line to line)	1.30	2.57	3.96	5.1	6.37	+/-10%
Phase Resistance: DCR 25°C	Ohms (line to line)	2.8	3.9	5.1	6.1	7.2	+/-12.5%
Phase Inductance: L	mH (line to line)	1.4	2.7	4.1	5.3	6.5	+/-30%
Weight	lbs	5.2	9.0	13.2	16.6	20.5	Estimated

Modular	"A"	"B"	"C"
	inches	inches	inches
DB-8000-A-1ES	0.520	0.715	1.20
DB-8000-B-1ES	1.020	1.165	1.700
DB-8000-C-1ES	1.570	1.873	2.250
DB-8000-D-1ES	2.020	2.323	2.700
DB-8000-E-1ES	2.520	2.839	3.200
Tolerances	Per Drawing	Per Drawing	Maximum

Motor Selection and Sizing

ROBOTIC BASE MOTOR EXAMPLE

Step 2. Continued…. Find the closest existing design in catalog or on-line

Pancake, Hall Effects, < 10” OD x < 2” Overall length

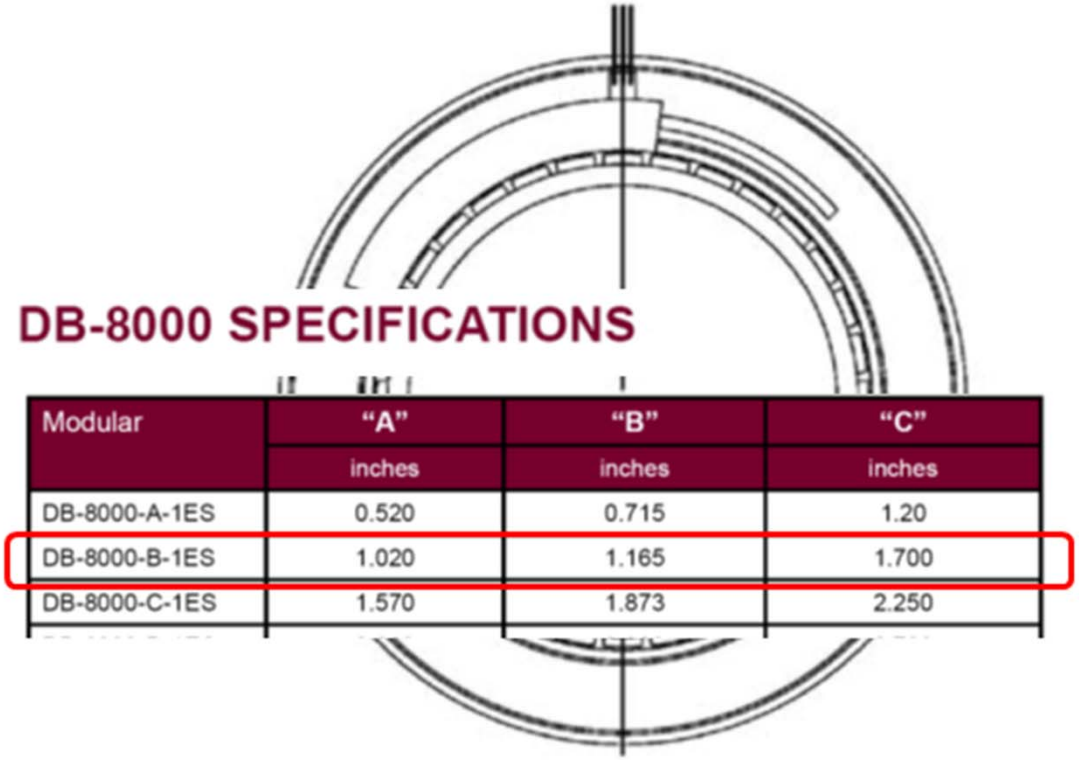

DB-8000 SPECIFICATIONS

Modular	“A”	“B”	“C”
	inches	inches	inches
DB-8000-A-1ES	0.520	0.715	1.20
DB-8000-B-1ES	1.020	1.165	1.700
DB-8000-C-1ES	1.570	1.873	2.250

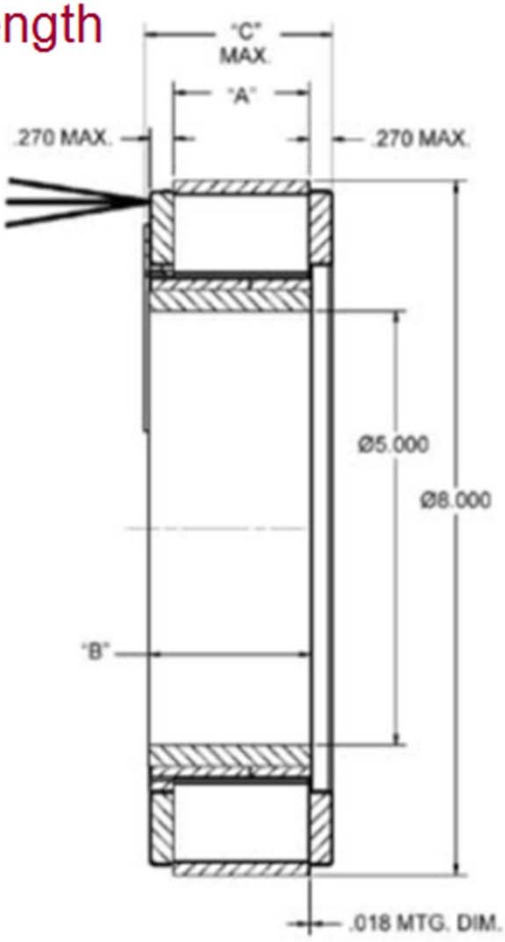

Motor Selection and Sizing

ROBOTIC BASE MOTOR EXAMPLE

Step 3. Estimate nominal current using closest existing design

$$T_{stall} = (T_{load} + T_{drag} + T_{cog}) = I * Kt \quad \text{and} \quad I = T / Kt$$

T_{stall} = (30.0 + 0.3 + 0.6) = 30.9 lb.ft = I * 2.57 lb.ft/A

$I = T / Kt$

I = 30.9 / 2.57 = **12.0 A Nominal**

$T_{op} = (T_{load} + T_{drag} + T_{cog}) = I * Kt$

T_{op} = (7.0 + 0.3 + 0.3) = 7.6 lb.ft at 100 rpm

$I = T / Kt$

I = 7.6 / 2.57 = **2.96 A Nominal**

Notes: Cogging Torque is estimated, since it is not provided in the product specifications. Cogging torque is less under running conditions than at start-up. Eddy current losses are estimated at zero due to slow speed of 100 rpm.

Motor Selection and Sizing

ROBOTIC BASE MOTOR EXAMPLE

Step 3. Estimate nominal voltage using closest existing design

$$V = IR + \omega K_b + V_L$$

Ref. $K_b = 1.356 * Kt = 1.356 * 2.57$ lb.ft/A $= 3.48$ V/rad/s

$V_{stall} = (12.0\ A) * (3.9\ ohms) + (0)$

$= \mathbf{46.8\ Vdc\ Nomimal}$

$V_{op} = \underbrace{(2.96\ A) * (3.9\ ohms)}_{11.54} + \underbrace{(100)*(0.1047)*(3.48)}_{36.44}$

$= \mathbf{48.0\ Vdc\ Nominal}$

Motor Selection and Sizing

ROBOTIC BASE MOTOR EXAMPLE

EVALUATION – Speed-torque Plot

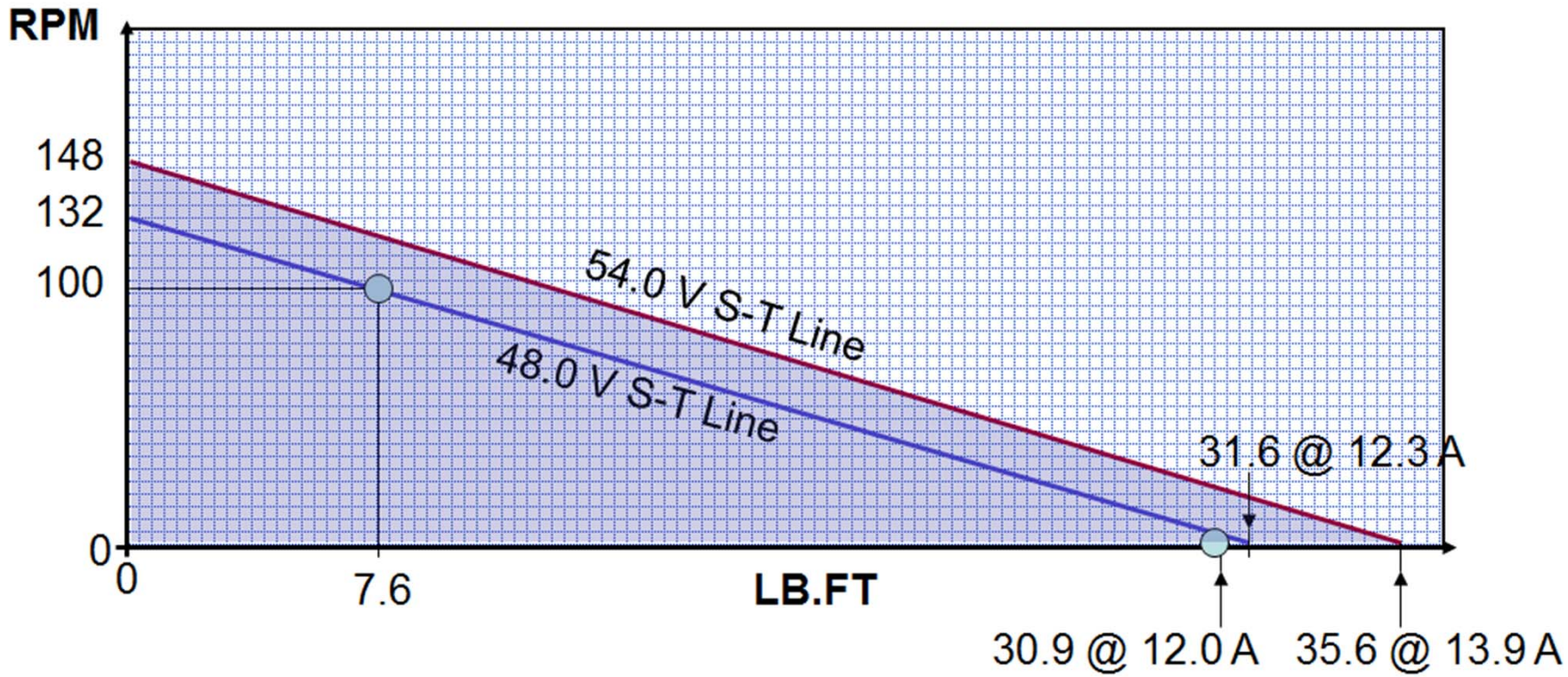

Motor Selection and Sizing

ROBOTIC BASE MOTOR EXAMPLE

EVALUATION – Nominal Summary

Step 3. Summarize Nominal Current and Voltage Requirements

Requirements at Nominal Conditions	Estimated Voltage (VDC)	Estimated Current (ADC)
Peak or Stall Condition 30.9 lb.ft at Start-up	**46.8**	**12.0**
Operating Condition 7.6 lb.ft at 100 rpm	**48.0**	**2.96**
Available Power	**48.0 – 54.0**	**12.0 Max.**

Note: Exceeding nominal conditions may require additional power.

ROBOTIC BASE MOTOR EXAMPLE

EVALUATION – Worst Case Conditions

Step 4. Consider worst case conditions, such as for temperature and voltage

Winding	Mult. DCR
-50°C	0.71
25°C	1.00
80°C	1.21
105°C	1.30
155°C	1.50

For Copper Wire

Vstall = (12.0 A) * (3.9 ohms)
= **46.8 VDC Nominally**

At a winding temperature of 105°C:

Vstall = (12.0 A) * (3.9 ohms * 1.30)
= (12.0 A) * (5.07 ohms)
= **60.8 VDC required Hot**

Vstall = (12.0 A*1.1) * (3.9 ohms * 1.30*1.125)
= (13.2 A) * (5.70 ohms)
= **75.3 VDC required Hot, Full tolerances**

Ratio change in resistance = (234.5 + Twire) / (234.5 + Tamb)

Motor Selection and Sizing

ROBOTIC BASE MOTOR EXAMPLE

EVALUATION – Speed-torque Plot

See effects of worst case conditions on the speed-torque plot.

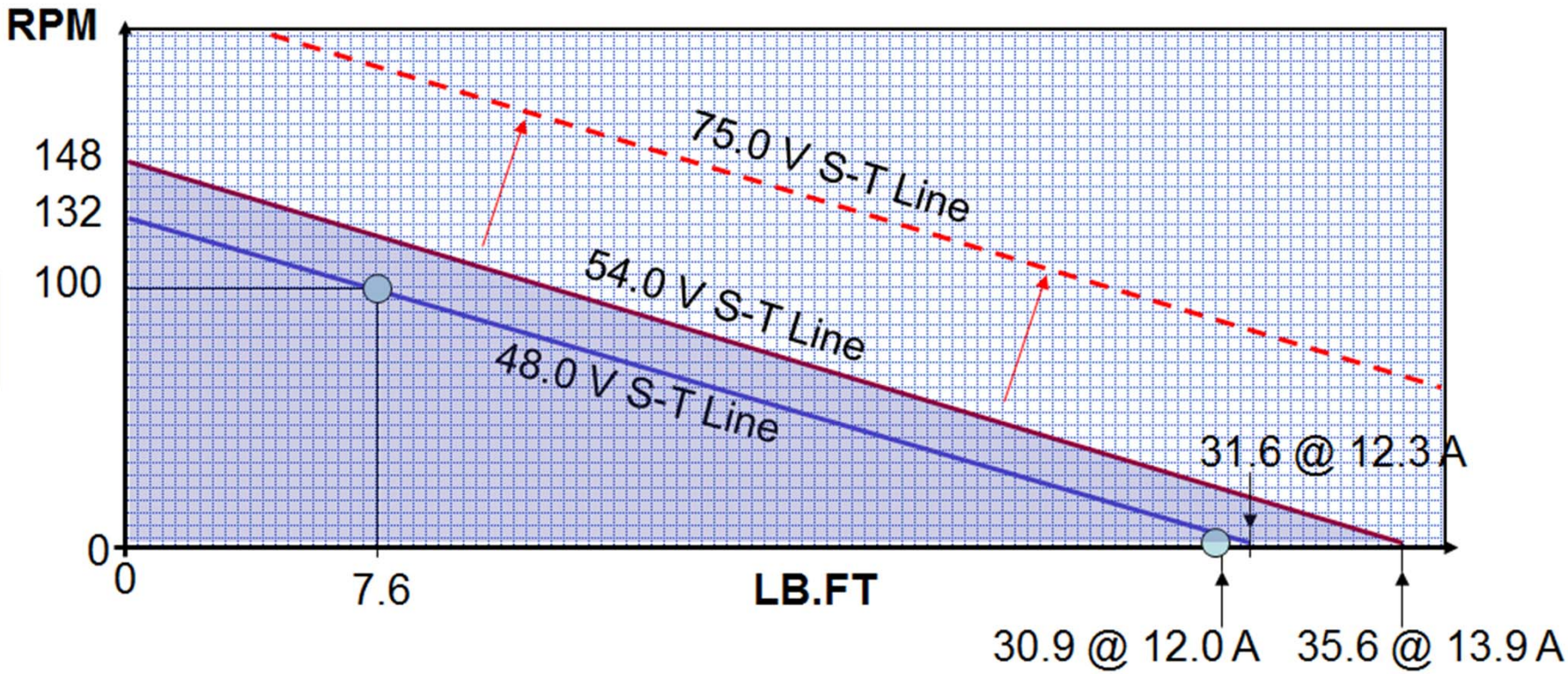

Motor Selection and Sizing

ROBOTIC BASE MOTOR EXAMPLE

EVALUATION – Solution…

Step 5. Determine if Design Changes are needed: **YES!**

- Determine if a higher voltage and current driver can be used (75 – 100V, ≥14.0A)
- Determine if the initial Robotic Base estimates have included some margin in the torque requirements that is unnecessary?
- Determine if the Base can grow to allow the next stack length motor in the family

Requirements at Worst Conditions	Estimated Voltage (VDC)	Estimated Current (ADC)
Peak or Stall Condition 30.9 lb.ft at Start-up	**75.3 (Low Kt and High / Hot DCR)**	**13.2 (Low Kt)**
Operating Condition 7.6 lb.ft at 100 rpm	**55.3 (High Kt, Ke and High / Hot DCR)**	**2.66**
Available Power	**48.0 – 54.0**	**12.0 Max.**

Motor Selection and Sizing

ROBOTIC BASE MOTOR EXAMPLE

EVALUATION – Solution…

Step 5. Determine if Design Changes are needed: **YES!**

•…Determine if the Robotic Base Space can grow to allow the next stack length motor in the family. Repeat Analysis.

Modular	"A"	"B"	"C"
	inches	inches	inches
DB-8000-A-1ES	0.520	0.715	1.20
DB-8000-B-1ES	1.020	1.165	1.700
DB-8000-C-1ES	1.570	1.873	2.250
DB-8000-D-1ES	2.020	2.323	2.700

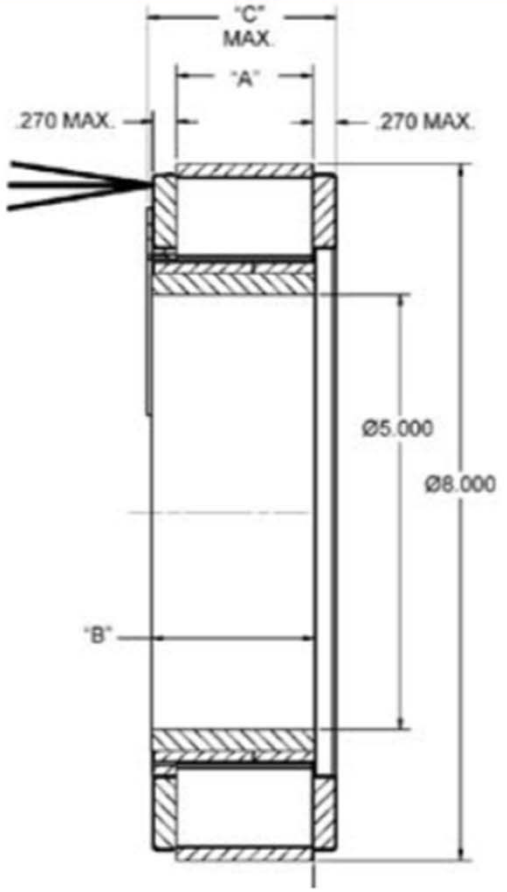

Motor Selection and Sizing

STACK LENGTH CHANGE EFFECTS

Frameless Brushless Motor

Modifications to Affect Torque Output – Stack Changes

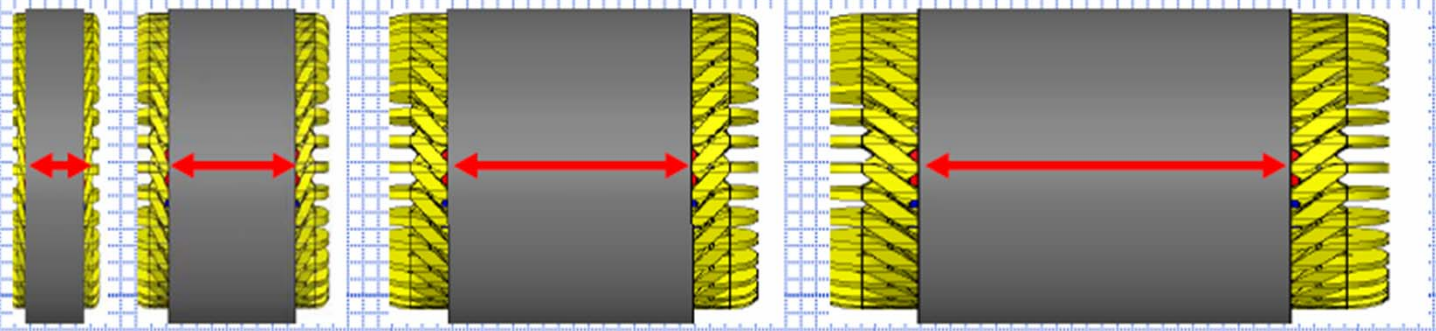

Half-Stack | Base Length | Double-Stack Length | Triple-Stack Length

Kt and Torque increase linearly with stack changes with rule: $T \sim D^2L$.

Km does NOT change linearly with stack changes due to the winding end turns.

Air gap clearances may need to increase with longer stacks reducing Kt slightly.

Motor Selection and Sizing

UNDERSTANDING KT and SPEED-TORQUE

Key Terminology: Motor Kt, Peak & Continuous Ratings, Torque, Speed, Current, Kt Linearity, and Saturation (Moog Global Series)

PERFORMANCE SPECIFICATIONS FOR STANDARD MODELS

G416-2xx

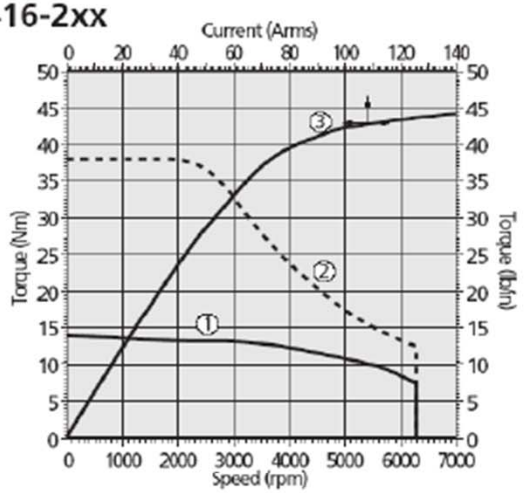

G416-4xx

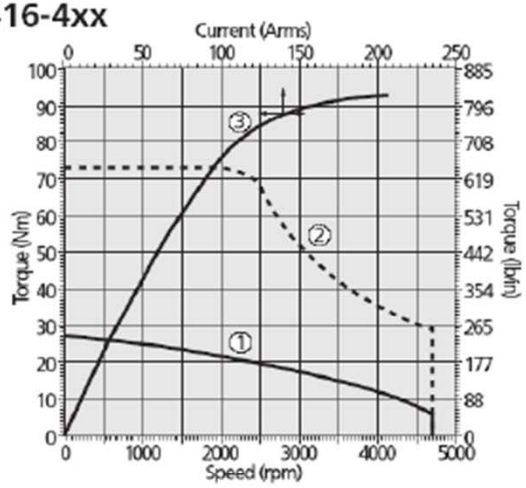

G416-6xx

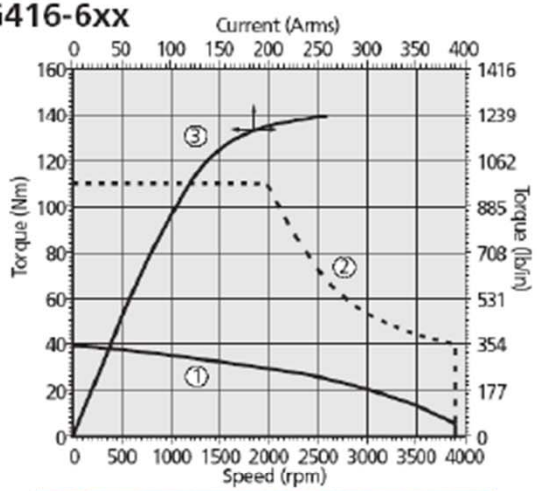

NOTES

1. Continuous ratings based upon:
   a. Operation in still air with ambient temperatures up to 55°C.
   b. Winding temperature at 100°C over ambient.
   c. Motor front flange attached to a steel mounting plate measuring 300 x 300 x 12 mm.
2. Peak ratings based on:
   a. Duty cycle of 10% (1 out of 10 seconds).
   b. Iron saturation of 15% or less.
3. Kt-line show non-linearity between current and torque at high end.

① Continuous torque with convection cooling
①a Continuous torque with optional fan cooling (select models)
② Peak torque
③ Motor Kt

Frameless Motor Rotor / Stator

Motor Selection and Sizing

SPECIAL CASE ROTATION – LIMITED ANGLE

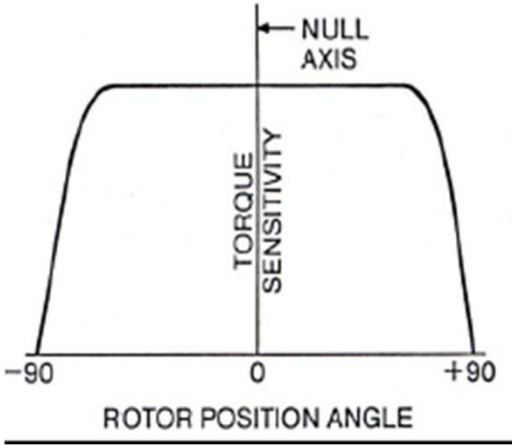

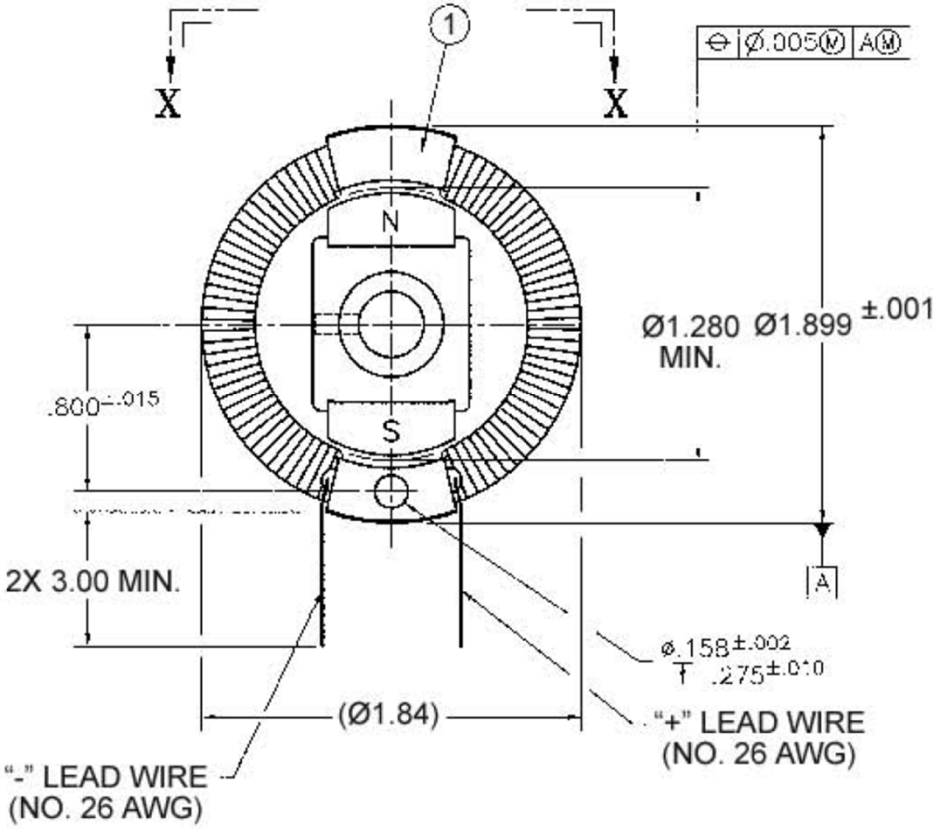

Limited Angle Applications may be met with toroidally wound brushless motors. No commutation is required.

Objectives in Review:

(1.) Introduce **Electric Motor Technology** and Its Role in Machines and Mechanisms

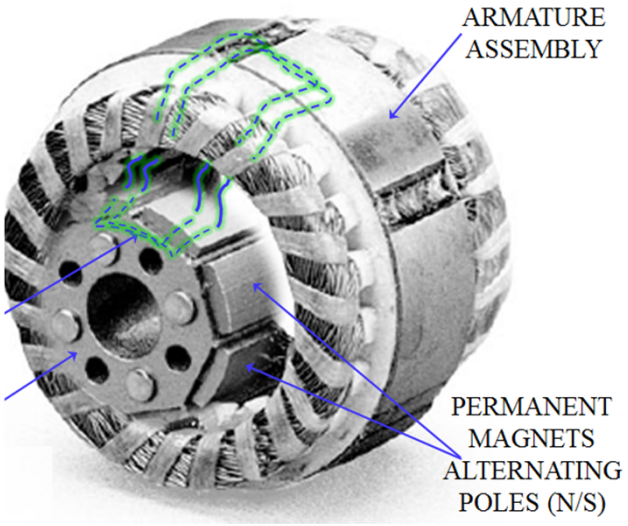

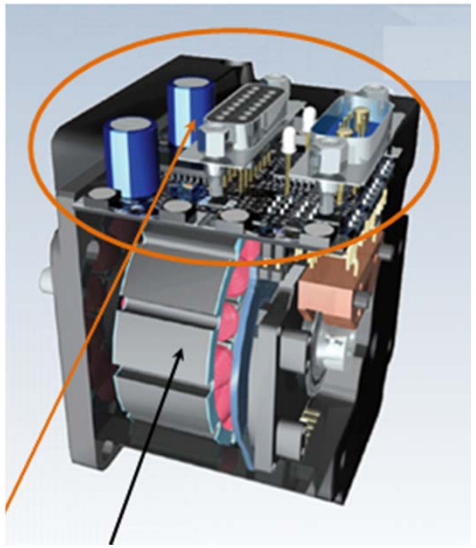

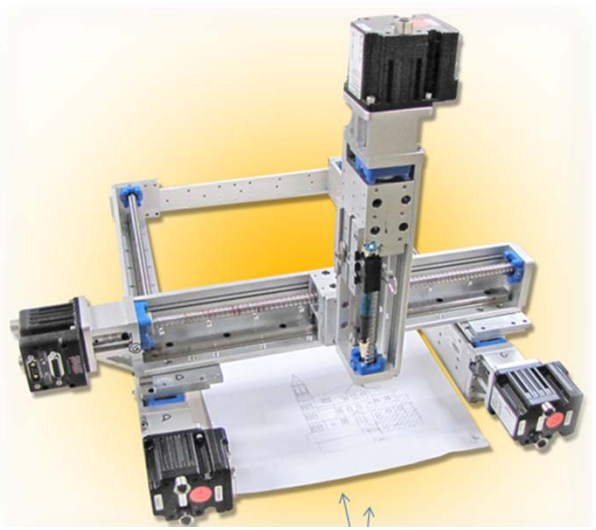

Objectives in Review:

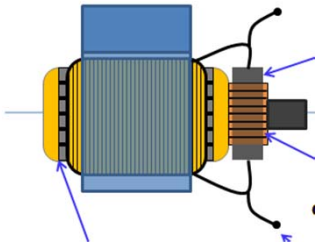

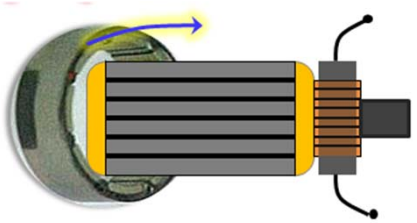

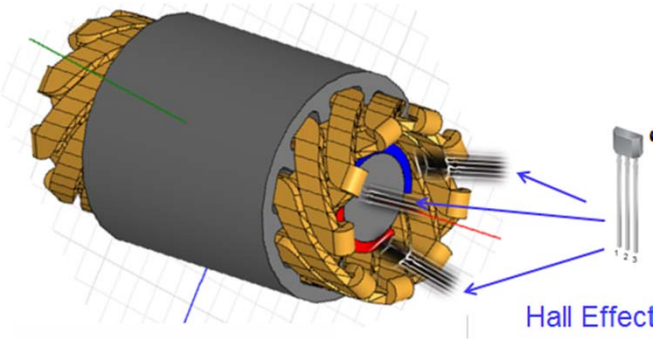

(2.) Survey Various **Major Types of Motor Designs** with an Emphasis on Permanent Magnet Motor Solutions

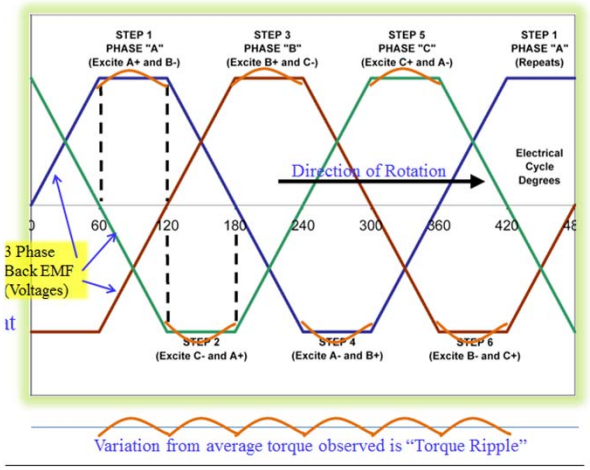

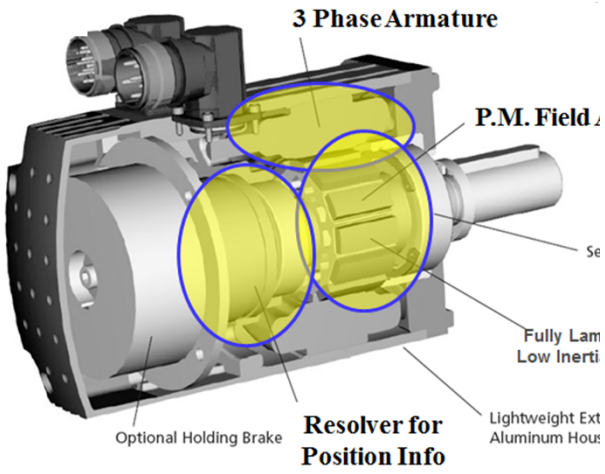

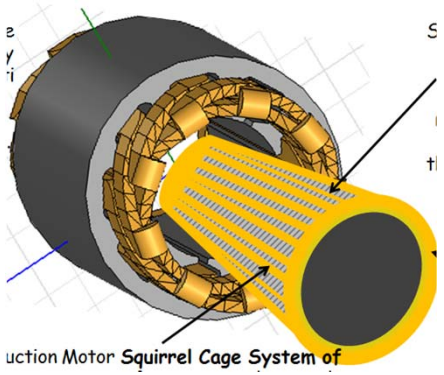

Objectives in Review:

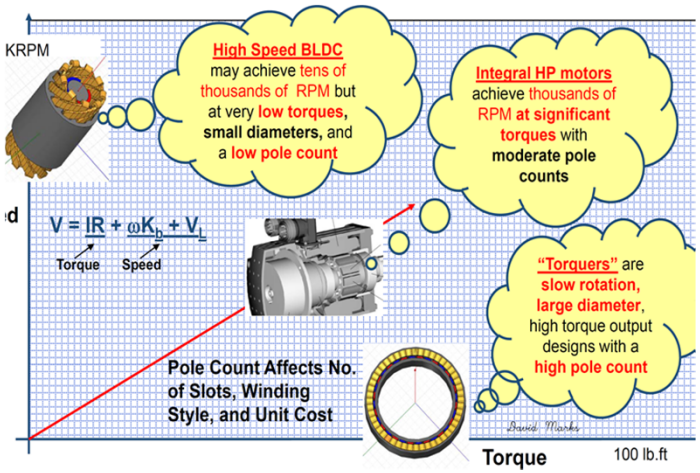

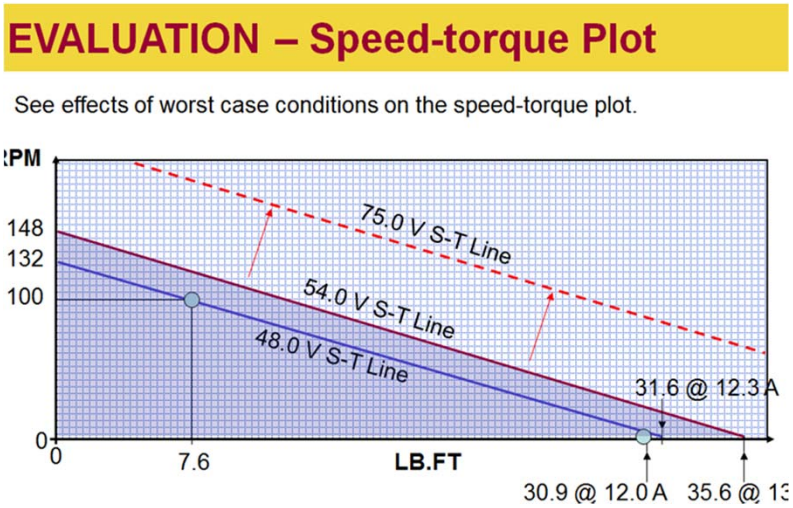

(3.) Provide a **Technical Basis for Selecting and Sizing Motors with Their Unique Attributes** for Motion Control Applications

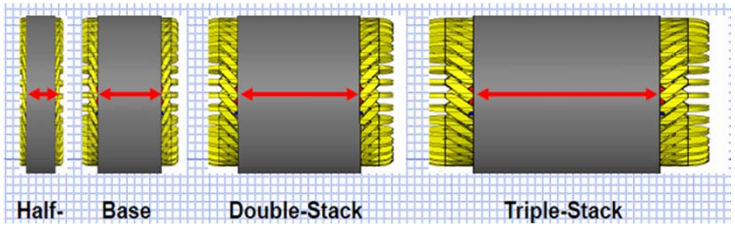

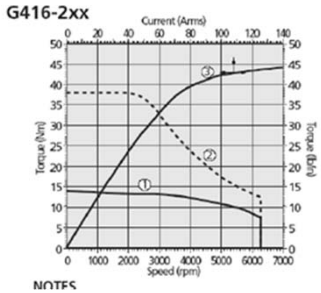

MOOG

Contact Information

Electric Motors for Machines and Mechanisms

Introductory Session
at M.I.T.
April 6, 2012

David Marks
Moog, Inc.
dmarks@moog.com
1.540.443.4619
1501 North Main Street
Blacksburg, Virginia 24060