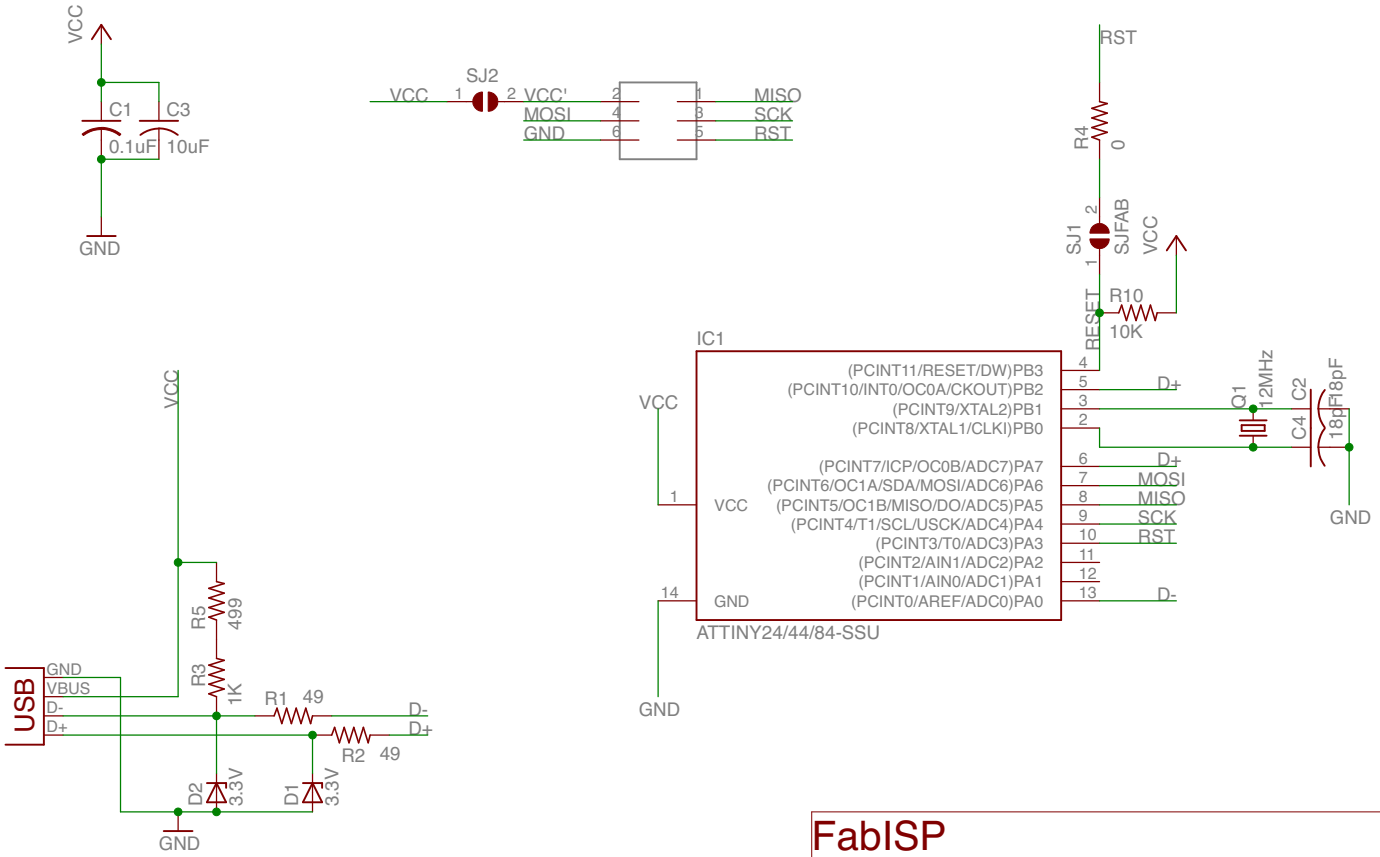

FabISP

CC 2.5 BY-SA

David A. Mellis (from USBtinyISP by Limor Fried)

TITLE: fabisp3

Document Number:

REV: 3

Date: 11/23/09 12:52 PM

Sheet: 1/1